ACCUTECH ENGINEERING
Structural Engineering
Geotechnical Engineering
Pavement Rehabilitation
Building Assessment
Accutech Engineering Systems, Inc.
3435 Carleton St
San Diego, CA 92106
Phone (619) 261-2619
Fax (619) 224-6888
info@accutechengineering.com

PRELIMINARY
GEOTECHNICAL AND GEOLOGIC EVALUATION
FOR A PROPOSED REMODEL OF AN EXISTING RESIDENCE
LOCATED AT
7342 REMLEY PLACE
LA JOLLA, CALIFORNIA 92037

PREPARED FOR:

Ted Pintar
7342 Remley Place
La Jolla, CA 92037

October 4, 2019

Accutech Engineering Systems, Inc.
3435 Carleton St
San Diego, CA 92106
Phone (619) 261-2619
Fax (619) 224-6888
info@accutechengineering.com

Table of Contents

Accutech Engineering Systems, Inc.
3435 Carleton St
San Diego, CA 92106
Phone (619) 261-2619
Fax (619) 224-6888
info@accutechengineering.com

ATTACHMENTS

INTRODUCTION

General

This report presents the results of a preliminary Geotechnical and Geologic evaluation for a proposed remodel of an existing residence located at 7342 Remley Place, in the La Jolla area of the City of San Diego, San Diego County, California (see Figure 1, "Site Vicinity Map," and Figure 2, "Site Location Map"). For the purposes of clarity and consistency within this report, the front of the house will be assumed to face north towards Remley Place, and all references to direction throughout the report will be based on this assumption.

The scope of our work, conducted to date, includes the following:

- **RESEARCH**
- **FIELD EVALUATION**
- **CONCLUSIONS & RECOMMENDATIONS**
- **MISCELLANEOUS**

Proposed Site Development

Based on our review of project data, we understand that the proposed improvements will consist of significant modifications (a near demolition of the existing building) with some additions to additions to the original footprint, with the addition of swimming pool, spa and patio sitting areas on the south portion of the lot. Please see Figure 3, "Schematic Site Plan/Location of Exploratory Test Pits" for a depiction of the proposed site development.

RESEARCH

General

Our research of the property consisted of the review of the following:

- Geologic Maps
- Review of Provided Plans
- Review of Published Documents

Geologic Maps

Preliminary review of geologic hazard maps suggests that the property is located within Zone 22 indicative of geologic hazards; however, it is not within the Alquist Priola Zone, associated with the Rose Canyon fault line. A suspected landslide exists just offsite near the southern property line; therefore, fault trenches were excavate to ascertain that no faults existed on this site. Consequently, a geology report, including trenching, perpendicular to the suspected fault lines across the entire site was conducted. The results of that study are provided in the attached Appendix E.

Review of Provided Plans

A review of the latest project plans indicate that the property will be stair stepping down from Remley Place, with a high elevation at Remley Place at approximately 510 and a lower elevation at the lower garage at approximately 475. On the uphill side of the property, nearer the eastern property line, the building will be two stories in height (a garage with upper level living quarters above).

Review of Published Documents

Published documents were reviewed as part of this study; see Appendix A.

FIELD EVALUATIONS

General

Representatives of Accutech Engineering Systems, Inc. visited the subject site on several occasions in April of 2019. The site visits were to conduct an area reconnaissance and observe the excavation of test trenches. Two (2) test pits logs are provided in Appendix B.

Our field evaluations and reviews of the following property features taken into account for preparation of this report include the following:

- Area and Site Reconnaissance
- Geologic Investigation
- Existing Site Development
- Subsurface Evaluation

Area and Site Reconnaissance

The site is a nearly rectangular-shaped parcel of land located at 7342 Remley Place in the City of La Jolla, San Diego County, California. The site is bordered by similarly developed residential properties to the north beyond Remley Place, as well as the neighboring properties to the east and west and at the base of the downward slope to the south toward Romero Drive.

The overall natural topography of the area consists of rolling hills. The topography of the immediate area surrounding the site, similar to the overall area, consists of moderate to steep sloping hills to the south. Topographically, the subject site is similar to the surrounding area, situated on a southerly sloping hillside. The present site itself is primarily comprised of natural slopes east and west of the building footprint down to the south.

Geologic Investigation

The site geology was reviewed by Mr. Michael Hart, a Certified Engineering Geologist in the State of California. The description of his site review, geologic conditions, and conclusions and recommendations are provided in Appendix E, "Preliminary Geologic Investigation".

Existing Site Development

The site is currently occupied by a single family residence. The foundation consists of a stair stepping footing and stem wall foundation. The rest of the building is framed. There are no retaining walls and the southern half of the property is undeveloped.

The existing site is mostly natural with no retaining walls and the foundation for the existing building is sloping (stair stepping) down to the south, creating a varying depth crawlspace. The crawlspace is approximately 6' near the south side where the crawlspace entrance is and approximately 2' deep along the northern portion near Remley Place. The slope down to the south is moderate, but becomes steep where the cut exists on the north side of Romero Drive.

The approximate elevation difference between the front edge of the property at Remley Place and rear of the property at Romero Drive is approximately thirty-six feet (36').

Subsurface Evaluation

One (1) long exploratory trench was excavated during a geologic study along the east property line and another to the south of the residence in order to conduct the geologic evaluation for the location of any on-site faults. For the purposes of our investigation, we logged the north end of trench # 1 and the center of trench # 2, which is shown on our site plan.

Soils encountered within the explorations are described as follows:

Topsoils:

Topsoils at the site were found to consist of one foot (1') of dark brown, slightly organic, slightly clayey topsoil (SM/SC). Topsoils classify as SM/SC according to the Unified Soils Classification System.

Weathered Formational Materials:

Beneath the topsoils a residual soil consisted primarily of well developed, yet weathered dark brown clay. The clay appears to be the remnant (weathering) of the parent Friars Formation.

Formational Materials:

Beneath the weathered material was the very hard, shale Friars Formation. The formation was dark gray, and massive, yet with down sloping unfavorable geology with bedding plans sloping to south. The massive black, dark gray shale was interbedded with yellow cemented sandstone.

LABORATORY TESTING

Laboratory tests were performed of the disturbed, undisturbed and remolded soil samples to determine their physical and mechanical properties, and their ability to perform appropriately under the demands of the project. The following tests were conducted on the sampled soils:

- Classification (ASTM D2487)
- Natural Moisture & Density (ASTM D2216)
- Grain Size Finer Than #200 Sieve (-200)
- Direct Shear (ASTM D3080)

A review of laboratory testing, including a description of the purpose and methodology of the tests, is provided, along with the quantitative and graphical (where applicable) test results (see Appendix C, "Laboratory Testing").

CONCLUSIONS AND RECOMMENDATIONS

General

Use of the quantitative results of laboratory test data, a thorough visual inspection of the soil types on the property, previous experience and research of similar soils all aided in developing the conclusions and recommendations in this report.

In general, it is our opinion that the proposed improvements, as described, are feasible from a geotechnical standpoint, within the limitations expressed herein, provided the recommendations of this report and generally accepted construction practices are adhered to. It is also our opinion that the site could be subjected to moderate to severe ground shaking in the event of a major earthquake along any of the faults mentioned previously, or other faults in the Southern California region; however, the seismic risk at this site is not significantly greater than that of the surrounding developed area (see "Seismic Forces" below).

We believe that the proposed development will have no negative consequences from geotechnical factors if the guidelines in this report are followed and other customary development techniques are used.

Recommendations are provided for each of the following areas of concern:

- Seismic Forces
- Foundations
    - Continuous Strip / Isolated Spread Footings
- Retaining Walls
- Drilled Caissons
- Tie Backs
- Concrete Slabs-on-Grade
    - Interior Floors & Exterior Hardscape
- Earthwork
- Surface Drainage

- Underdrain System
- Swimming Pools
- Construction Observation

Seismic Forces

The following seismic design parameters should be used when developing loads and forces for structures:

Latitude, Longitude: 32.84, -117.26

S_S	1.274
S_1	0.492
S_{MS}	1.274
S_{M1}	0.742
S_{DS}	0.849
S_{D1}	0.495

Site Class: D from Table 1613A.5.2 based on

Occupancy Category: II from Table 1604.5

Therefore: Seismic Design Category: D

Since the Seismic Design Category is D increased lateral soils pressure due to seismic ground motion is required (see "**Retaining Walls**" section of this report).

Foundations

The project and site are suited for the use of continuous strip or isolated spread footings, caissons and grade beams, or appropriate combinations of these systems, provided special care as described herein is exercised.

Since adequate bearing materials were found within economic depths of the proposed foundations (zero to six feet (6'), a standard spread footing foundation system may be used. A suitable foundation system with "tolerable" movement (three-quarters inch [3/4"] total and one-half inch [1/2"] differential over a horizontal distance of fifteen feet [15']), may be constructed if the following design and construction precautions are observed:

Continuous Strip / Isolated Spread Footings

1. All footings should be founded on the lower competent Ardath Shale. The depth to this material can be inferred from the excavation of the exploratory test pits (and trenches found in the geologic report), see Appendix B & D respectively. The depth to undisturbed formational material will likely range from above the elevation of the footings, to as much as six feet (6') below the standard footings based on the elevations of the floor levels in the various areas.

2. Footings bearing a minimum of twelve inches (12") into competent soils as described within this report may be designed based on a maximum allowable soils pressure of three thousand (3,000) psf. Bearing values may be increased by twenty percent (20%) for each additional foot of width or depth, up to a maximum of three hundred percent (300%) of the designated values. Bearing values may be increased by thirty-three percent (33%) when considering wind, seismic, or other short duration loadings.

3. To resist lateral pressures a value of two hundred and fifty (250) pcf may be used, with a coefficient of friction of twenty-five-hundredths (0.25) between the soil and concrete footings. Special care must be used when designing the footings for passive pressure depending on the horizontal distance to daylight. This is critical when reviewing the foundation levels relative to the bedding planes, which is discussed further.

4. Footings shall be a minimum of eight inches (8") thick and be embedded at least twelve inches (12") into the lowest adjacent grade and below the 30 degree line at the edge of Remley. In addition, the following parameters should be used as a minimum for designing footing width:

Floors Supported	Width
1	12 inches
2	15 inches
3	18 inches

5. For footings constructed within or adjacent to sloping terrain, a minimum of seven feet (7') horizontal setback, as measured horizontally from the bottom of the footing to daylight within formational soils or properly re-compacted fill, should be maintained; however, the seven feet (7') must be a horizontal distance from a 30 degree line beginning at Remley Place and extending up the site. This may require deepening footings where passive pressure is needed for resistance of lateral movement. For retaining walls in similar conditions, the

setback should be seven feet (7') as measured horizontally from the bottom of the footing to daylight within formational soils.

6. All footings should be reinforced with a minimum of two (2) #4 bars at the top and two (2) #4 bars at the bottom (three inches [3"] above the ground). For footings over thirty inches (30") in height, additional reinforcement should consist of at least one (1) vertical #4 bar and one (1) longitudinal #4 bar, located at eighteen inches (18") o.c. in each direction. Retaining wall design may also be warranted to resist lateral loads. This detail should be provided on a case-by-case basis by an engineer experienced in foundation design.

7. All isolated spread footings should be designed utilizing the above given values and reinforced with #4 bars at twelve inches (12") o.c. in each direction (three inches [3"] above the ground). Isolated spread footings should have a minimum horizontal dimension of twenty-four inches (24").

8. All loose soil found at the base of footings, when an excavation is opened, should be removed and the foundation extended to undisturbed competent soils as described, or founded over-excavated material.

9. Additional reinforcement of one (1) #4 bar at the top and one (1) #4 bar at the bottom (three inches [3"] above the ground), should extend ten feet (10') in each direction from the transition line.

10. Our definition of "tolerable" limits of settlement should be confirmed by the Engineer or Architect of Record (EOR or AOR), and if not acceptable, modifications to these recommendations should be made.

The preceding foundation recommendations are based on foundations bearing on suitable formational materials and grading of the site performed in accordance with the recommendations in the "Earthwork" section of this report. None of the above is to preclude engineering requirements by the structural designer of the project, where calculations require more stringent measures. The above embedment and reinforcement considerations are minimum guidelines, which may be increased at the discretion of the engineer or designer responsible for structural considerations for the project.

While the formational materials are hard and very suitable for vertical support of the building, due to the slope and bedding planes, the potential for added load at the top of the slope, or cuts at the bottom of slope, can result in instability of the site. In order to help reduce the effects of cutting of the toe near Remley Place, retaining walls will most likely be required, as is discussed later in this report.

Retaining Walls

It is likely that retaining walls will be required at this site to support excavations near the southern portion of the property adjacent to Romero Drive. Additionally, it may be necessary to have an intermediate retaining wall under the building, or a retaining wall along the south side of the rear pad to support patios, spas, etc. Should retaining walls be required, these walls should also be designed and constructed in accordance with the following recommendations:

- Unrestrained cantilever retaining walls should be designed using an active equivalent fluid pressure of forty (40) pcf. This assumes that granular, free draining material will be used for backfill, and that the backfill surface will be level. The on-site soils are suitable for this. For sloping backfill, the following parameters may be utilized:

Condition	3:1 Slope	2:1 Slope
Active	50 pcf	60 pcf

- Any other surcharge loadings within the 1:1 slope extending to the base of the wall should be analyzed in addition to the above values.

- Due to the Seismic Design Category D definition, an additional lateral pressure on the retaining walls due to earthquake motions must be included. Calculations indicate that an increase in soil pressure equal to twenty percent (20%) for Seismic Design Category "D," of the above provided active pressure values should be added to the walls for inertial forces due to seismic activity. All applicable increases in allowable stresses and/or other coefficients, as well as load duration factor reductions, may be utilized when including this short duration load on retaining walls.

- A coefficient of friction of 0.35 between the soil and concrete footings may be utilized to resist lateral loads in addition to the passive soil pressures above.

- Retaining wall backfill should be placed and compacted in accordance with the "Earthwork" section and Appendix D, "Grading Specifications." Where there is a conflict, the more stringent recommendations shall be used unless otherwise specified by the engineer.

- If the tops of retaining walls are restrained from movement, they should be designed using an additional uniform soil pressure of 7 x H psf, where H is the height of the wall in feet, or an at-rest equivalent fluid pressure of sixty (60) pcf, whichever is more conservative.

- Passive soil resistance may be calculated using an equivalent fluid pressure of three hundred (300) pcf, for level formational materials. This value assumes that the formational material being utilized to resist passive pressures extends horizontally two and one-half (2 ½) times the height of the passive pressure wedge of the soil. Where the horizontal distance of the available passive pressure wedge is less than two and one-half (2 ½) times the height of the soil, the passive pressure value must be reduced by the percent reduction in available horizontal length. It is likely that a very deep "key" or possibly multiple "keys" will be required to develop enough resistance to sliding.

- Retaining walls should be braced and monitored during compaction of backfill. If this cannot be accomplished, the compactive effort should be included as a surcharge load when designing the wall. The inclusion of the seismic force should account for this.

- All walls should be provided with adequate back drainage to relieve hydrostatic pressure in accordance with Appendix D, Figure D-6 "Site Retaining Wall Drainage." All exterior site retaining walls should, at a minimum, have the strike mortar omitted in the lowest course to allow for drainage.

Retaining walls relying on a floor diaphragm for support should be completely backfilled before any framing that is to be in contact with these walls is installed.

In order to have foundations deep enough to resist lateral forces and develop either passive pressures or friction values (especially in the case of retaining walls) a drilled caisson system may prove to be more cost effective than deepened foundations.

Drilled Caissons

1. Caisson embedded a minimum of twenty feet (20') into dense formational materials may be designed based on a maximum allowable end bearing pressure of five thousand (5,000) psf (neglecting pier weight). The depth to undisturbed formational material will likely range from approximately four feet (4') from the existing ground surface.

2. Caissons should be designed using a passive earth pressure of an equivalent fluid weight of four hundred (400) psf. The passive pressure can be computed on a width of double the caisson diameter. This value assumes that the soil being utilized to resist passive pressures (formational material) extends horizontally two and one-half (2 ½) times the height of the passive pressure wedge of the soil (in formational material).

3. For designing the caisson in bending, the point of fixity should be taken as one-third (1/3) of the caisson depth into competent formational materials, acting from the fill and/or

residual/formational contact (i.e., if the caisson is embedded six feet [6’] into formational material, the point of fixity would be located two feet [2’] below the fill/subsoil/formational contact).

4. Grade beams should be used to tie all caissons together. They should be designed to resist all vertical and lateral loads imposed on them from the structure.

5. Grade beams for unrestrained retaining walls should be designed to resist torsional forces imposed on them and adequately connected to the caissons.

6. Caissons should not be out of plumb by more than two percent (2%) of their total length.

7. Caisson excavations should be cleaned of all loose soil debris, subsequent to excavation and prior to the placement of reinforcing steel. Caisson excavations should then be visually observed under the direction and supervision of a licensed geotechnical engineer to verify depth of embedment into formational materials and cleanliness of the excavation bottom. If excessive slough is observed, hand cleaning will be required at the discretion of the geotechnical engineer.

8. Caissons should be designed with a minimum diameter of twenty-four inches (24”) to facilitate inspection and cleaning, and be reinforced in accordance with the requirements of the structural engineer. The caisson holes should not be allowed to remain open for more than twenty-four (24) hours. If necessary, special arrangements should be made for the city inspector to be available or accept the geotechnical engineer’s and special inspector’s reports as adequate documentation. Concrete should be placed as soon after pier excavations as possible. The excavations should not be allowed to remain open overnight.

9. For caissons constructed within or adjacent to slopes, the embedment should begin at a depth when the distance to daylight is at least seven feet (7’).

None of the above recommendations should preclude more stringent engineering requirements by the project designer or the project engineer reviewing the structural composition of the building. The preceding foundation recommendations are based on foundations bearing in formational soils or properly compacted fills and grading of the site performed in accordance with the recommendations in the “Earthwork” section of this report. We recommend that our office be contacted to observe the caisson excavation.

Tie Backs

Due to the height of the cut at the lower garage, shoring will most likely be required. Shoring should be constructed using the values provided in the retaining walls section of this report. A feasible approach to

this would be to construct a tie back wall at various heights as the excavation is deepened. The tie back wall will help stabilize the excavation during construction, and also help stabilize the site after construction. The tie back wall could also be used as a permanent retaining wall. For estimating purposes, the length of tie backs should be assumed to extend from the lower retaining wall at Romero Drive to the north property line at Remley Place. A twelve inch (12") thick shotcrete wall with four foot (4') vertical and six foot (6') horizontal spacing between tie backs should be assumed. If the system seems financially desirable, detailed parameters can be provided for its design.

Concrete Slabs-on-Grade

As we understand it, concrete slabs-on-grade may be utilized in the construction of the remodel to the existing residence for interior floors and exterior hardscape improvements at this site. Slabs will be suitable if the following guidelines and all other recommendations within this report are closely adhered to:

Interior Floors & Exterior Hardscape

1. On-site fills, or the deeper formational materials or suitable materials in the Foundation section of this report, are suitable for the support of slabs.

2. A uniform layer of four inches (4") of clean sand is recommended under any new slabs in order to more uniformly support the slab, help distribute loads to the soils beneath the slab, and act as a capillary break for upward migrating moisture. In addition, a plastic moisture barrier layer (6 mil) should be placed mid-height in the sand bed to act as a vapor barrier.

3. Concrete slabs-on-grade should have a nominal thickness of five inches (5") and should be reinforced with #3 bars placed at mid-depth in the slab at twelve inches (12") on center in each direction.

4. Adequate control joints should be installed to control the unavoidable cracking of concrete that takes place when undergoing its natural shrinkage during curing. The control joints should be well located to direct unavoidable slab cracking to areas that are desirable by the designer.

The aforementioned precautions will not prevent slab movement if the underlying soils become moistened; however, they will minimize the damage if such movement occurs.

Earthwork

Due to the stair stepping nature of the building, other than the excavation required, it is likely that little earthwork will be required. Where earthwork is required, the work should be performed in accordance with pertinent city standards, Appendix D, "Grading Specifications," and the following recommendations:

- **Site Preparation:**

  Prior to grading, areas of proposed improvement should be cleared of surface and subsurface debris, and stripped of vegetation and top soil. Holes resulting from the removal of debris, existing foundations, or other underground improvements, which exist within or below the proposed foundation depths or below the undercut depths noted in the "Removals" section, should be prepared, filled, and properly compacted using on-site material or a non-expansive import material.

- **Removals:**

  Existing fill soils found to mantle the site in the exploratory excavations are not desirable for the support of structures or settlement-sensitive improvements in their present state. Where settlement-sensitive improvements are to be constructed (including interior and exterior slabs), the unsuitable soils should be removed and replaced with properly compacted fill. This should be performed to a distance of five feet (5') beyond any proposed building and/or hardscape surfaces. Remove vegetation, debris, and topsoil should be properly disposed of off-site, prior to the commencement of any fill operations.

  Cut slopes should remain stable for a short period of time, if limited to six feet (6') in height and slopes not exceeding 2.1:1 (horizontal to vertical) in soils and 1.5:1 (horizontal to vertical) in formational material. Care should be exercised when making removals adjacent to, or near, existing foundations that will remain during construction. Shoring will most likely be required along the east wall and between Buildings #1 and #2.

  No equipment, material, soil stockpile, other loads, or surcharge should be placed at the top of slopes within a horizontal distance from the top of the slope equal to one-half (1/2) the height of the excavation. Our office should be contacted to observe all temporary slopes during construction to determine if any adverse geologic conditions are exposed which would affect the stability of the slope.

- **Fills:**

  Areas to receive fill and/or structural improvements should be scarified to a minimum depth of eight inches (8"), brought to near optimum moisture content, and properly re-compacted to at least

ninety percent (90%) relative compaction (based on ASTM D1557). All fill slopes should be properly compacted to ninety percent (90%) relative compaction in order to avoid erosion and slough age. A minimum overall slope pf 2:1 (horizontal to vertical) should be maintained. When fills are required to support any area of a foundation slab, then the entire foundation or slab should be supported by a minimum of thirty-six inches (36") of fill to avoid differential settlement. A maximum overall slope of 2:1 (horizontal to vertical) should be maintained.

Fills should generally be placed in lifts not exceeding eight inches (8") in thickness. If importing soil is planned, soils should be non-expansive and free of debris and organic matter. Prior to importing, soils should be visually observed, sampled, and tested at the borrow pit area to evaluate soil suitability as fill.

Surface Drainage

Adequate drainage precautions at any site are important especially with the sloping hillside to the south and potential reduction in the safety factor against stability should the soils become saturated. Under no circumstances should water be allowed to pond against or adjacent to footings, foundation walls, or retaining walls. The ground surface surrounding the building should be relatively impervious in nature, and slope to drain away from the building in all directions, with a minimum slope of five percent (5%) for a horizontal distance of ten feet (10'). Area drains or surface swales should then be provided to accommodate runoff and avoid any ponding of water. Roof gutters and downspouts with tightline drains should be installed on the proposed structure and discharged to flow to suitable outlets a minimum of ten feet (10') away from the foundation. Surface and area drains should not be connected to any wall drainage or underdrain system. Drainage should also be diverted away from the top of slopes to avoid erosion and "creep." Surfaces should be adequately vegetated or otherwise covered with hardscape surfaces and provided with appropriate energy dissipaters, where applicable, to avoid pending erosion.

Underdrain System

Due to the stair stepping nature of the development, there will be retaining walls into the hard formational material; therefore, underdrains will be required. A tub effect that is created by an excavation in stiff soils, localized perched water may infiltrate the foundation at the footing level, causing uneven foundation and/or slab movement. This is also a source of dampness to subterranean spaces and an accelerator for the natural weathering that may take place, and subsequent reduced bearing value of the formational materials. This is especially true at this site, which has had historical problems of fill settlement and moisture infiltration due to marginal drainage conditions. Therefore, we recommend that a four inch (4") perforated drainpipe, surrounded with clean washed gravel wrapped in filter fabric, be installed along the perimeter of the foundation, primarily where cuts and/or crawlspace excavations are performed.

The drainage system should be backfilled with gravel and wrapped with Mirafi filter fabric or similar filter material to avoid contamination. The drain should slope a minimum of one-eighth inch (1/8") per foot and should be day lighted to a positive outfall at Romero Drive.

Swimming Pools

It appears that a swimming pool sits within an area that is supported with retaining walls on three (3) sides (north, east and west) and unsupported on its south and west side. The pool edges need to be designed as retaining walls in conjunction with the structural retaining walls; or maybe independent of the site retaining walls and designed as standard pool walls. It appears that the south portions of the east and west pool walls may be unsupported and may need to be designed in that manner. The north and east walls where below grade should be designed in accordance with the provisions of the "Retaining Walls," "Foundations," and "Concrete Slabs-on-Grade" sections of this report, as minimum guidelines. Specific care should be taken to design the walls of the pool to retain the surrounding soils with the pool empty. It is also recommended that the downhill side of the pool be designed as a retaining wall subjected to 62.5 pcf hydrostatic water load with no passive pressure on the downhill side, The pool should be designed in accordance with normal pool construction and be provided with pressure relief valves to avoid floating of the pool should hydrostatic pressures exist when the pool is emptied.

Construction Observation

The following services should be conducted under the direction and supervision of a qualified geotechnical engineer prior to or during construction of the proposed improvements (if applicable):

1. Grading and foundation plan review, prior to building department submittal.
2. Observation of all excavations to verify conformance with those anticipated based on those found in our test pits.
3. Observation of caisson drilling during the drilling, reinforcement placing, and concrete pouring.
4. Observation of all tie-backs.
5. Observation and testing of any fill placement and preparation of compaction report (see Appendix D).
6. Observation of any conditions that vary from the conditions as described within this report.

MISCELLANEOUS

General

Homesites, in general, and hillside lots, in particular, need maintenance to continue to function and retain their value. Many homeowners are unaware of this and allow deterioration of their property. It is important to familiarize homeowners with some guidelines for maintenance of their properties and make them aware of the importance of maintenance.

Some governing agencies require hillside property developers to utilize specific methods of engineering and construction to protect those investing in improved lots or constructed homes. For example, the developer may be required to grade the property in such a manner that rainwater will be drained away from the lot and to plant slopes so that erosion will be minimized. The developer may also be required to install permanent drains.

However, once the lot is purchased, it is the buyer's responsibility to maintain these safety features by observing a prudent program of lot care and maintenance. Failure to make regular inspection and maintenance of drainage devices and sloping areas may cause severe financial loss. In addition to his/her own property damage, he/she may also be subject to civil liability for damage occurring to neighboring properties as a result of his/her negligence.

Maintenance Guidelines for Homeowners

The following maintenance guidelines are provided for the protection of the homeowner’s investment:

- Surface drainage must be directed away from structural foundations to prevent ponding of storm waters or irrigation adjacent to footings.

- Care should be taken that slopes, terraces, berms (ridges at crown of slopes) and proper lot drainage is not disturbed. Surface drainage should be conducted from the rear yard to the street through the side yard, or to natural drainage ways within the property boundary.

- In general, roof and yard runoff should be conducted to either the street or the storm drain by non-erosive devices such as sidewalks, drainage pipes, ground gutters, and driveways. Drainage systems should not be altered without expert consultation.

Limitations

It must be noted that no structure or slab should be expected to remain totally free of cracks and minor signs of cosmetic distress. The flexible nature of wood and steel structures allows them to respond to movements, resulting from minor unavoidable settlement of fill or natural soils, the swelling of clay

soils, or the motions induced from seismic activity. In addition, products containing cement also shrink during natural curing. All of the above can induce stresses that frequently result in cosmetic cracking of wall and floor surfaces, such as stucco or interior plaster, floor tiles, or other brittle finishes. This is especially true when considering an addition or modification to an existing building.

Data for this report was derived from surface observations at the site, knowledge of local conditions, and a visual observation of the soils exposed in the subsurface excavations. The recommendations in this report are based on our experience in conjunction with the limited soils exposed at this site and neighboring sites. We believe that this information gives an acceptable degree of reliability for anticipating the behavior of the proposed improvements; however, our recommendations are professional opinions and cannot control nature, nor can they assure the soil profiles beneath or adjacent to those observed; therefore, no warranties of the accuracy of these recommendations, beyond the limits of the obtained data, is herein expressed or implied unless we are contacted to observe all excavations. This report is based on the evaluation at the described site and on the specific anticipated construction as stated herein. If either of these conditions is changed, the results would also most likely change.

Man-made or natural changes in the conditions of a property can occur over a period of time. In addition, changes in requirements due to state-of-the-art knowledge and/or legislation are rapidly occurring. As a result, the findings of this report may become invalid due to these changes; therefore, this report for the specific site is subject to review and not considered valid after a period of one (1) year, or if conditions as stated above are altered. This report is not meant to imply, nor does it offer any warranty whatsoever as to the future performance or value of the property. Use of this report is for the sole purpose of the client. It is understood that Accutech Engineering Systems, Inc. will be compensated in full for any costs of litigation that may arise from the use of this report, including, but not limited to, fees for staff, attorneys, and/or expert witness testimony.

It is the responsibility of the owner or his representative to ensure that the information in this report be incorporated into the plans and/or specifications and construction of the project. It is advisable that a contractor familiar with construction details typically used to deal with the local subsoil and seismic conditions be retained to build the structure.

We hope the report provides you with necessary information to continue with the development of the project. If you have any questions regarding this report, or if we can be of further service, please do not hesitate to contact us at 619.261.2619.

Very truly yours,

ACCUTECH ENGINEERING SYSTEMS, INC.

Robert J. Randall RGE #707 RJR: dm

REGISTERED PROFESSIONAL ENGINEER
ROBERT JOHN RANDALL
No. GE 707
Exp. 3-31-21
GEOTECHNICAL
STATE OF CALIFORNIA

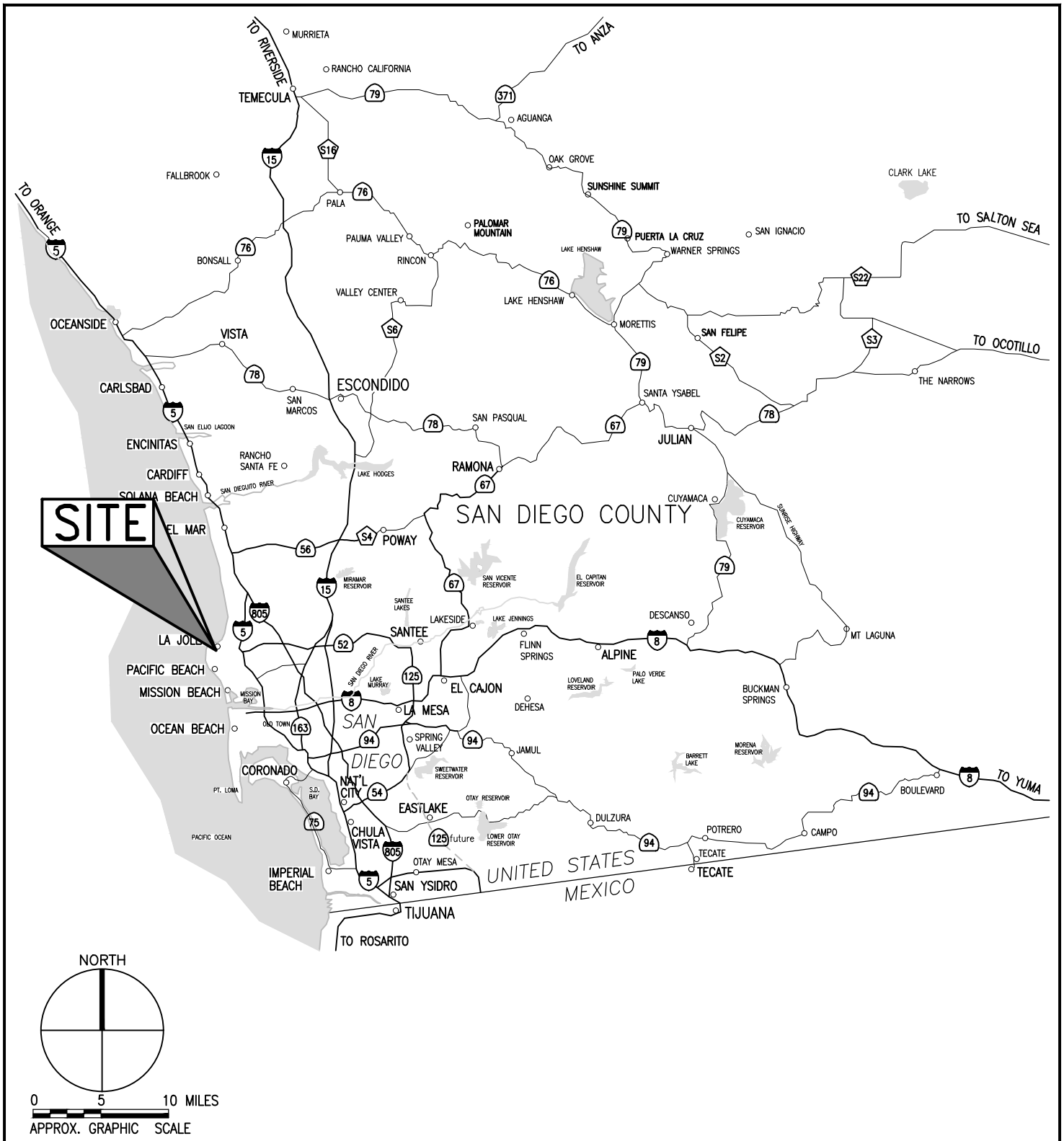

SITE VICINITY MAP

ACCUTECH ENGINEERING

REGISTERED PROFESSIONAL ENGINEER
ROBERT JOHN RANDALL
C 040385
Exp 3/31/21
CIVIL
STATE OF CALIFORNIA

7342 REMLEY PL.
LA JOLLA, CA 92037

DATE:	DRWN BY:	FIGURE NO.:	PROJECT NO.:
04-18-2019	GLN	1	19564-1

C:\Users\Gary\Documents\Autodesk\My Projects\Accutech\19564-1 7342 Remley Pl\19564-1 Fig1_SiteVicinityMap SD.DWG, 4/19/2019 13:04:4 PM, DWG To PDF.pc3

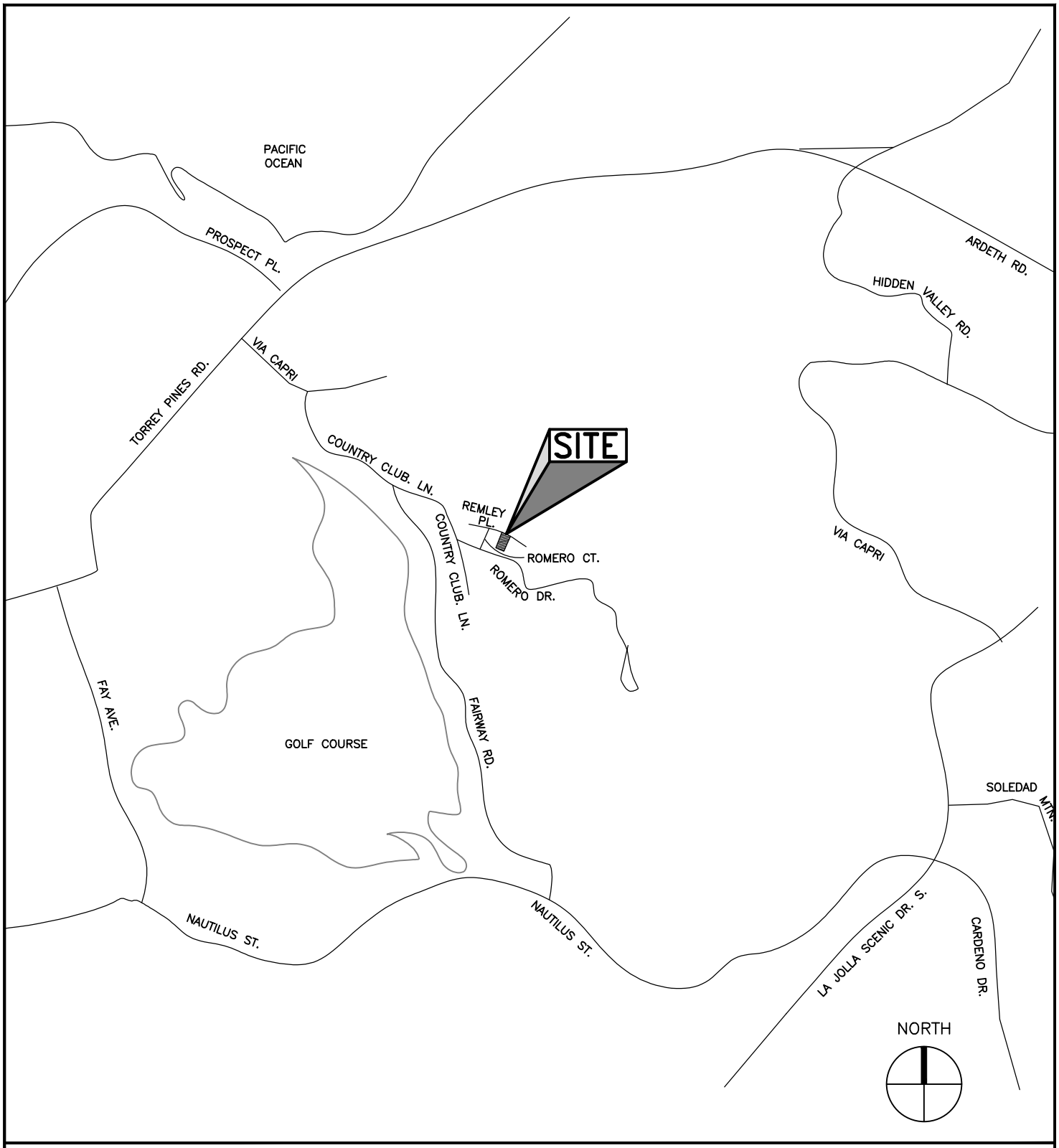

SITE LOCATION MAP

ACCUTECH ENGINEERING

REGISTERED PROFESSIONAL ENGINEER
ROBERT JOHN RANDALL
C 040385
Exp 3/31/21
CIVIL
STATE OF CALIFORNIA

7342 REMLEY PL.
LA JOLLA, CA 92037

DATE:	DRWN BY:	FIGURE NO.:	PROJECT NO.:
04-18-2019	GLN	2	19564-1

C:\Users\Gary\Documents\Autodesk\My Projects\Accutech\19564-1 7342 Remley Pl\19564-1 FIG2_SiteLocationMap.DWG, 4/19/2019 11:32:50 PM, DWG To PDF.pc3

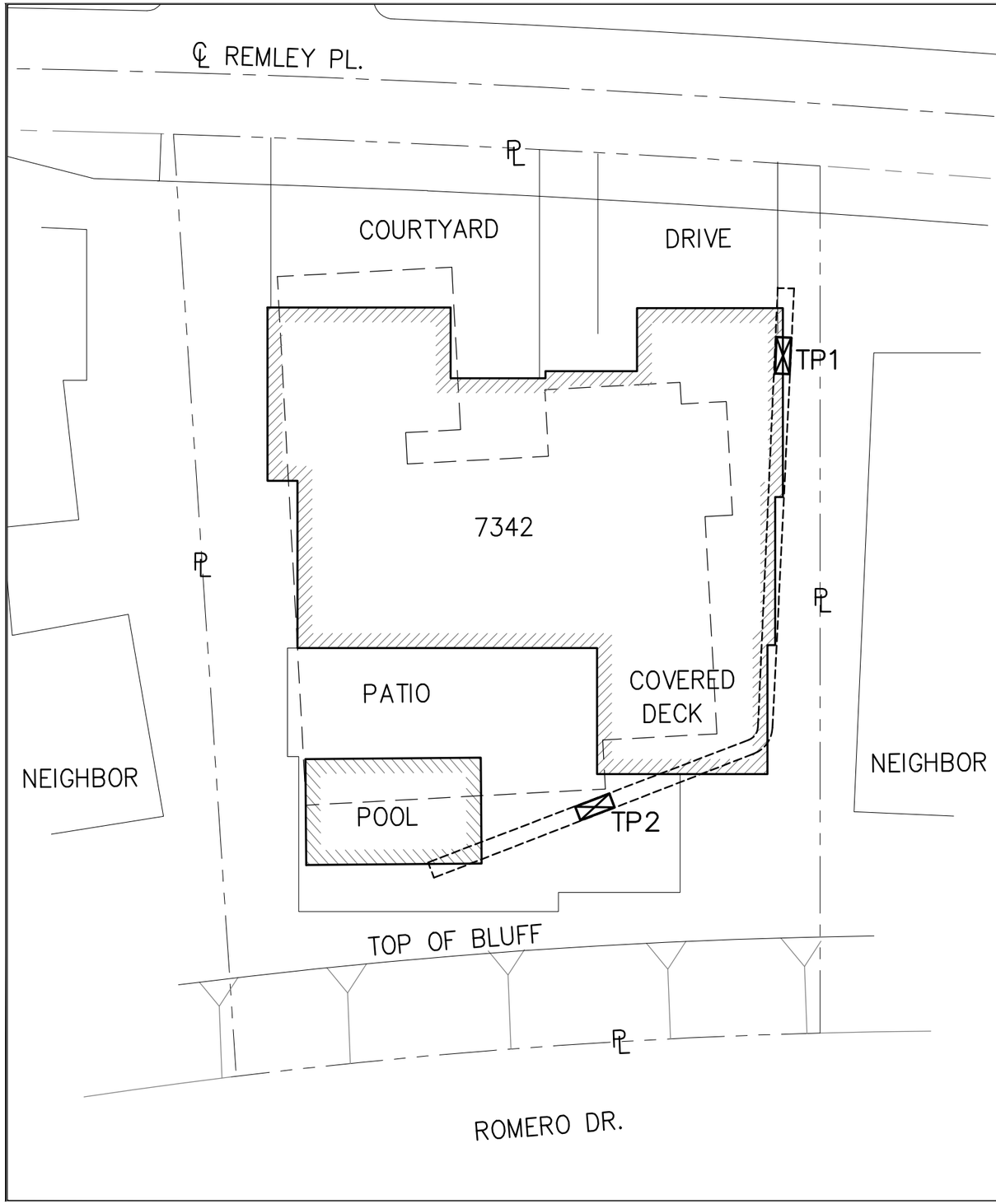

LEGEND:

- TPx — NUMBER & LOCATION OF TEST SAMPLES & LOGGED AREA (PITS) WITHIN TRENCH
- EXIST'G (E) HOUSE
- PROPOSED NEW STRUCTURES
- GEOLOGY TRENCH, BY MIKE HART
- PROPERTY LINE
- HARDSCAPE/OTHER BLDGS

NOTES:

1. ALL EXIST'G (E), U.N.O.

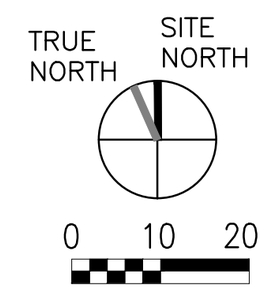

SCHEMATIC SITE PLAN/ LOCATION OF EXPLORATORY TEST PITS

ACCUTECH ENGINEERING

REGISTERED PROFESSIONAL ENGINEER
ROBERT JOHN RANDALL
C 040385
Exp 3/31/21
CIVIL
STATE OF CALIFORNIA

7342 REMLEY PL.
LA JOLLA, CA 92037

DATE:	DRAWN BY:	FIGURE NO.:	PROJECT NO.:
04-16-2019	GLN	3	19564-1

C:\Users\Gary\Documents\Autodesk\My Projects\Accutech\19564-1 7342 Remley Pl\19564-1 FIG3_SitePlan_LocOfTestPits.DWG, 10/31/2019 10:44:59 AM, DWG To PDF.pc3

Remley Place

7342 Remley Pl, La Jolla, CA 92037, USA

Latitude, Longitude: 32.8411482, -117.26138839999999

Date	10/4/2019, 7:30:43 PM
Design Code Reference Document	ASCE7-10
Risk Category	II
Site Class	D - Stiff Soil

Type	Value	Description
S_S	1.274	MCE_R ground motion. (for 0.2 second period)
S_1	0.492	MCE_R ground motion. (for 1.0s period)
S_{MS}	1.274	Site-modified spectral acceleration value
S_{M1}	0.742	Site-modified spectral acceleration value
S_{DS}	0.849	Numeric seismic design value at 0.2 second SA
S_{D1}	0.495	Numeric seismic design value at 1.0 second SA

Type	Value	Description
SDC	D	Seismic design category
F_a	1	Site amplification factor at 0.2 second
F_v	1.508	Site amplification factor at 1.0 second
PGA	0.572	MCE_G peak ground acceleration
F_{PGA}	1	Site amplification factor at PGA
PGA_M	0.572	Site modified peak ground acceleration
T_L	8	Long-period transition period in seconds
SsRT	1.274	Probabilistic risk-targeted ground motion. (0.2 second)
SsUH	1.513	Factored uniform-hazard (2% probability of exceedance in 50 years) spectral acceleration
SsD	2.458	Factored deterministic acceleration value. (0.2 second)
S1RT	0.492	Probabilistic risk-targeted ground motion. (1.0 second)
S1UH	0.563	Factored uniform-hazard (2% probability of exceedance in 50 years) spectral acceleration.
S1D	1.071	Factored deterministic acceleration value. (1.0 second)
PGAd	0.946	Factored deterministic acceleration value. (Peak Ground Acceleration)
C_{RS}	0.842	Mapped value of the risk coefficient at short periods
C_{R1}	0.874	Mapped value of the risk coefficient at a period of 1 s

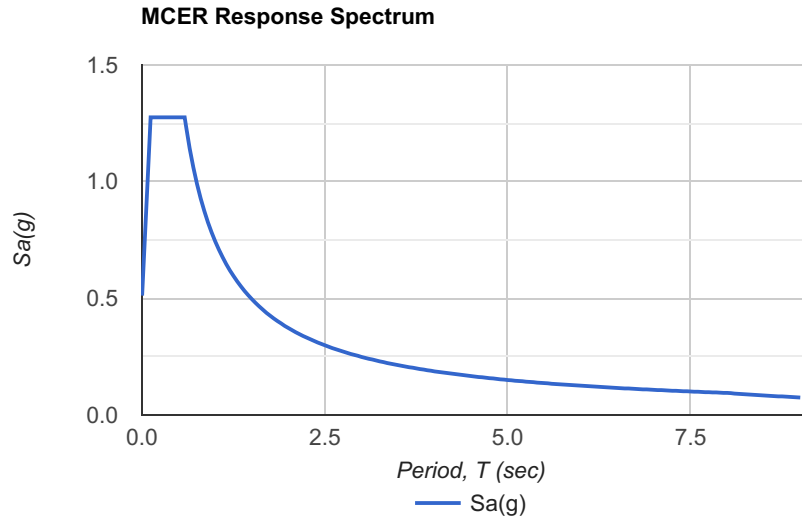

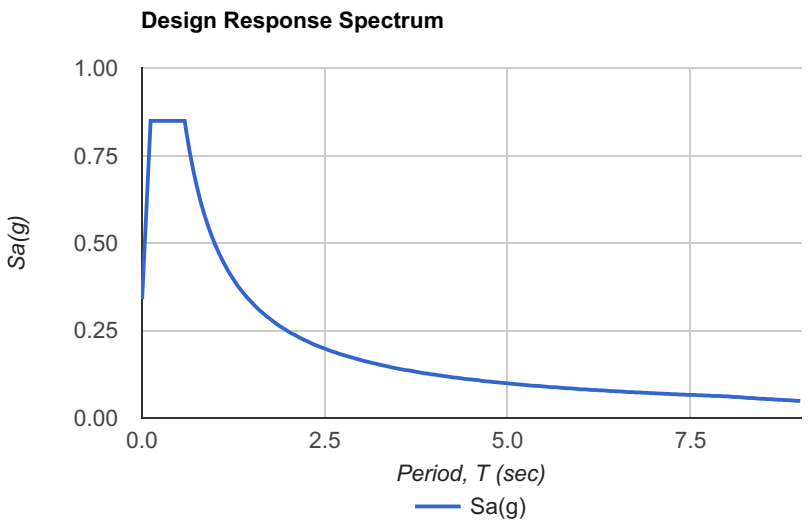

DISCLAIMER

While the information presented on this website is believed to be correct, SEAOC /OSHPD and its sponsors and contributors assume no responsibility or liability for its accuracy. The material presented in this web application should not be used or relied upon for any specific application without competent examination and verification of its accuracy, suitability and applicability by engineers or other licensed professionals. SEAOC / OSHPD do not intend that the use of this information replace the sound judgment of such competent professionals, having experience and knowledge in the field of practice, nor to substitute for the standard of care required of such professionals in interpreting and applying the results of the seismic data provided by this website. Users of the information from this website assume all liability arising from such use. Use of the output of this website does not imply approval by the governing building code bodies responsible for building code approval and interpretation for the building site described by latitude/longitude location in the search results of this webstie.

APPENDIX A

REFERENCES

REFERENCES

1. Blanc, R.P., and Cleveland, G.B., 1968, *Natural Slope Stability as Related to Geology, San Clemente Area, Orange and San Diego Counties, California*, California Division of Mines and Geology, Special Report 98.

2. Bowles, J.E., 1982, *Foundation Analysis and Design*, 3rd Edition, McGraw Hill.

3. Department of Public Works, County of San Diego, California, 1977, *Faults and Epicenters*, Scale of 1 inch:2 miles.

4. Greensfelder, R. W., 1974, *Maximum Credible Rock Acceleration from Earthquakes in California*.

5. Harris, M.E., 1987, *Geology of San Diego County, California, A Bibliography with Subject Index*, California Division of Mines and Geology, Special Publication 96.

6. Jennings, C.W., 1977, *Geologic Map of California*, California Division of Mines and Geology, Scale 1:750,000.

7. Jennings, C.W., 1992, *Preliminary Fault Map of California*, California Division of Mines and Geology, Revision of the 1975 Fault Map of California, Scale 1:750,000, Open File Report 92-03.

8. Kahle, J.E., and others, *Preliminary Geologic Map of the California-Baja Border Region, Imperial and San Diego Counties, California*, California Division of Mines and Geology, Open File Report 84-59 LA.

9. Kennedy, M.P., and Peterson, G.L., 1975, *Geology of the San Diego Metropolitan Area, California*, California Division of Mines and Geology, Bulletin 200.

10. Kennedy, M.P., Tan, S.S., Chapman, R.H. and Chase, G.W., 1975, *Character and Recency of Faulting, San Diego Metropolitan Area, California*, California Division of Mines and Geology, Special Report 123.

11. Pacific Section, 1991, *Eocene Geologic History San Diego Region*, Society of Economic Paleontologists and Mineralogists, Book 68.

12. San Diego Planning Department, County of San Diego, California, 1974, Landslides, Scale of 1 inch: 2 miles.

13. City of San Diego, 1995, San Diego Seismic Safety Study.

14. California Building Standards Commission, *2007 California Building Code*.

15. Hart, Earl W., 1990, *Fault-Rupture Hazard Zones in California*, California Division of

Mines and Geology, Special Publication 42, Revised 1990.

16. International Conference of Building Officials, *2009 International Building Code*. Department of the Navy, *Naval Facilities Engineering Command Design Manual 7.2*, May 1982.

17. *Landslide Hazard Identification Program*, California Division of Mines and Geology, Annual Report 1990.

18. Seed, H.B. and Idriss, I.M., 1982, *Ground Motions and Soil Liquefaction During Earthquakes*, Earthquake Engineering Research Institute.

APPENDIX B

Subsurface Exploration

TABLE OF CONTENTS

LEGEND

Symbol	Description
∇	Groundwater level or groundwater seepage at the time of drilling could vary seasonally.
	Location of Undisturbed sample taken in a boring using a 2 3/8 inch I.D. modified California Split Tube Sampler liner rings.
	Location of Undisturbed sample taken using a 3 inch O.D. thin-walled tube sampler (Shelby Tube) hydraulically pushed.
	Location of disturbed sample taken in a boring using a standard tube sampler, 2 inch O.D. 1 3/8 inch I.D. See Blow Count.
	Location of bulk disturbed sample taken from auger cuttings in borings or shovel in test pits.
	Location of Undisturbed sample taken in a test pit using a 2 3/8 inch I.D. "California" liner ring and hand drive adapter.
	Location of carved, chuck or block Undisturbed sample in a test pit.
D	Sample disturbed during sampling. No recovery.
K	Sample obtained using a 3400 lb. "Kelly bar" free falling (12")
Blow Count	Number of drives of sampling device for 6 inch sample, unless noted otherwise. For example: 14/13/12 = (4) — 14 blows of a 140 lb. weight free falling (30") were required to drive the sampling device the first 6 inches then 13 blows for the next 6", etc. 50(4) — 50 blows of the weight were required the drive the sampling device 4 inches. 18/14 = — Blow count converted to SPT when other samplers are used. See attached "Blow Count Conversion".

DEFINITION OF TERMS

Term	Definition
ϕ	Angle of internal friction (degrees)
-200	Material passing the #200 sieve (%)
App Dnsty	Apparent Density is the estimated density of the soil, at the depth noted, during field observation and classification (pounds per cubic foot).
App Moist	Apparent Moisture is the estimated moisture content, at the depth noted, during field observation and classification (%).
Cf	Coefficient of Friction
DD	Dry Density
EI	Expansion Index
HD	Hand Drive Sample
HP	Unconfined compressive strength (hand penetrometer, tsf)
ID	Inside Diameter
KSF	Kips per square foot
LL	Liquid Limit (%)
MC	Natural Moisture Content
MSL	Mean sea level
NP	Non-Plastic
OD	Outside Diameter
PI	Plastic Index (%)
PL	Plastic Limit (%)
PSF	Pounds per square foot
SPT	Standard Penetration Test
TSF	Tons per square foot
UC	Unconfined compressive strength (cohesion intercept, ksf)
USCS	Unified Soil Classification System
WD	Wet Density

BLOW COUNT CONVERSION (N-VALUE)

The blow count representation of the penetration resistance of a soil (N-Value) is achieved by driving a standard 2 inch O.D. split-barrel sampler utilizing a drive weight of 140 pounds impacting the sampler from a fall of 30 inches. This method is known as the Standard Penetration Test (SPT) and is also used to obtain disturbed samples. Frequently, a larger sampler with brass rings is used to obtain undisturbed samples. A correlation between SPT blow count and blow count from a larger diameter ring lined sampler used may be obtained by considering drive energy created by the fall of the 140 pound weight over the effective cross sectional area of the samplers. The drive energy of a larger 3 inch diameter sampler (133 ft-lb/in^2) divided by the drive energy of the standard 2 inch diameter sampler (211 ft-lb/in^2) results in a conversion factor of 0.630. The blow count of the 3 inch diameter sampler may be multiplied by this conversion factor to equate it to SPT blow count.

Correlation of blow count between SPT and ring lined split-barrel drive sampler:

Given: Standard drop hammer weight of 140 pound drop of 30 inches

O.D. SPT 2 in.	O.D. Split-barrel 3 in.
I.D. SPT 1.375 in.	I.D. Split-barrel 2.375 in.

Effective Area of SPT:

$A = \pi d^2/4$

$A = \pi(2\text{ in})^2/4 - \pi(1.375\text{ in})^2/4$

Effective Area = 1.657 in^2

Drive Energy SPT:

(140 lb)(2.5 ft)/1.657 in^2

<u>211 ft-lb/in^2</u>

Effective Area of Ring Lined Split-Barrel Sampler:

$A = \pi d^2/4$

$A = \pi(3\text{ in})^2/4 - \pi(2.375\text{ in})^2/4$

Effective Area = 2.638 in^2

Drive Energy Ring Lined Split-Barrel Sampler:

(140 lb)(2.5 ft)/2.368 in^2

<u>133 ft-lb/in^2</u>

∴ Conversion (C):

C = 133 ft-lb/in^2 ÷ 211 ft-lb/in^2

C = 0.630

TEST PIT LOG TP-1

Equipment: Backhoe	**Type:** Test Pit **Dimensions:**	**Date Logged:** 4/9/19
Hole Elevation: **Datum:** See Fig. 3	**Groundwater Depth:** NA	**Logged By:** RJR

Location: North End of Trench # 1

Depth (ft)	USCS	Field Description and Classification	Sample Type	H P Tons/ SF	Apparent Density (pcf)	Apparent Moisture (%)	Laboratory	Misc.
1	SC SM	SAND, silty, loose to medium dense, dark brown, very moist **FILL**		**1.5**				
2	CL	CLAY, slightly sandy, stiff, moist, dark brown **WEATHERED FORMATION**		**2.5** **3.0**			MC = 16.4 EI = 25 -200 = 62 φ = 21 degrees c =320	
3 4 5	CL SP	SAND, clay (shale), very hard, brown to gray, slightly moist with lenses of yellow clay, silty sandstone **ARDATH SHALE FORMATION**		**4.5** **5.0** **5.0**				
6 7 8 9 10								

Project Name: Remley Place	**Project #:** 19564-1
Project Location: 7342 Remley Place, La Jolla CA 92037	**Figure #:** TP - 1

TEST PIT LOG TP- 2

Equipment: Backhoe	**Type:** Test Pit **Dimensions:**	**Date Logged:** 4/9/19
Hole Elevation: **Datum:** See Fig. 3	**Groundwater Depth:** NA	**Logged By:** RJR

Location: Center of Trench # 2

Depth (ft)	USCS	Field Description and Classification	Sample Type	H P Tons/ SF	Apparent Density (pcf)	Apparent Moisture (%)	Laboratory	Misc.
1	SC SM	SAND, silty, loose to medium dense, dark brown, very moist **FILL**		**1.0**				
2	CL	CLAY, slightly sandy, stiff, moist, dark brown **WEATHERED FORMATION**		**2.0** **3.0** **3.0**			MC = 18.2 EI = 22 -200 = 71 φ = 18 degrees c =280	
3 4	CL SP	SAND, clay (shale), very hard, brown to gray, slightly moist with lenses of yellow clay, silty sandstone **ARDATH SHALE FORMATION**		**4.5** **5.0 +** **5.0 +**				
5 6 7 8 9 10								

Project Name: Remley Place	**Project #:** 19564-1
Project Location: 7342 Remley Place, La Jolla CA 92037	**Figure #:** TP - 2

APPENDIX C

LABORATORY TESTING

LABORATORY TESTING

Laboratory tests were performed in general accordance with the accepted practice of the American Society for Testing and Materials (ASTM), the Uniform Building Code (UBC), and other suggested methods. A brief description of the tests performed is as follows:

- **CLASSIFICATION** - Field classifications are prepared in the field and are verified in the laboratory by a visual examination per (ASTM D2487). Further classification is provided with the aid of supplemental laboratory testing of selected samples obtained in the field. Samples are classified, as coarse or fine grained, well or poorly graded, high or low plasticity, per the Unified Classification System.

- **NATURAL MOISTURE & DENSITY** - Moisture contents and dry densities are determined for representative soil samples in accordance with ASTM D2216. This information is an aid to classification and assists in recognition of variations in material consistency with depth. The dry unit weight is determined in pounds per cubic foot, and the in-situ moisture content is determined as a percentage of the dry unit weight. The results are summarized in the excavation and/or boring logs and the summary of laboratory testing within this section of the report.

- **ATTERBERG LIMITS** - The plastic and liquid limits and the plasticity index are determined in accordance with ASTM D4318. This test is performed on the portions of the sample passing the #40 sieve, and assists in classifying the fine grained soils into low or high plasticity fines.

- **BULK DENSITY** - The density of materials by the water displacement method is used for determining the bulk density of an irregular shaped soils or rock sample. By weighing a sample in both a natural state and submerged state, the buoyant force is obtained. This equates to the volume of displaced water, and thus the volume of the sample. The sample is coated with wax to keep water from seeping into it. Calculations are performed to compensate for the weight of the wax, and bulk densities (pounds per cubic foot) of the samples are obtained.

- **GRAIN SIZE FINER THAN #200 SIEVE (-200)** - Samples are washed through a #200 sieve (opening size of 0.7mm) in accordance with ASTM D1140. The weight of the dried material passing the #200 sieve is represented as a percentage of the total sample dry weight. The results are presented on the gradation test results sheets, within this section of the report.

- **GRAIN SIZE DISTRIBUTION** - The grain size distribution is determined for representative samples of the native soils in accordance with ASTM D422. Samples are washed through a #200 sieve (opening size of 0.7mm) and then mechanically vibrated through a series of sieves of various size openings. The results are presented on the gradation test results sheets, within this section of the report.

- **OPTIMUM MOISTURE / DENSITY** - The maximum dry density and optimum moisture content of typical soils are determined in the laboratory in accordance with ASTM D1557, Methods A and/or C. Method A specifies that a four (4) inch diameter cylindrical mold of 1/30 cubic foot of volume be used for soils. Method C specifies that a six (6) inch diameter cylindrical mold of 1/13 cubic foot of volume be used for soils. Moisture Content of the soil sample is varied to determine the "Optimum Moisture Content" at which the "Maximum Density" occurs. The results of these tests are used in conjunction with the field density tests to determine the degree of compaction of the fill and/or native soils.

- **EXPANSION INDEX** - Expansion Index tests on remolded samples are performed on representative samples of soils per UBC Standard 29-2. The test is performed on the portion of the sample passing the #4 standard sieve. The sample and is then compacted in a 4-inch-diameter mold at a saturation of approximately 50 percent. The specimen is placed in a consolidometer with porous stones at the top and bottom, subjected to a total normal load of 12.63 pounds (144.7 psf), and the sample is allowed to consolidate for a period of 10 minutes. The sample is submerged in water and the change in vertical movement is measured and recorded until the rate of expansion becomes nominal. The expansion index is reported as the total vertical displacement in inches times 1000.

- **DIRECT SHEAR** - Direct Shear tests are performed in accordance with ASTM D3080, to determine the failure envelope relating confining pressure to shear strength, based on yield shear strength. This is given as "0", the angle of internal friction and "C" the unconfined strength (cohesion intercept). A minimum of three (3) samples are tested at different vertical loads. The shear stress is applied at a constant rate of strain at approximately 0.05 inch per minute and the ratio is thus obtained and plotted.

- **RESIDUAL DIRECT SHEAR** - Residual shear samples are sheared, as describe in the preceding paragraph, with a greatly reduced shearing rate. The upper portion of the specimen is pulled back to the original position and the shearing process is repeated until no further decrease in shear strength is observed with continued shearing (at least 3 times). There are two methods to obtain the shear values: (a) the shearing process is repeated for each load applied and the shear value for each normal load is recorded. One or more specimens can be used in this method; (b) only one specimen is needed and a very high normal load (approximately 9,000 psf) is applied from the beginning of the shearing process. After the equilibrium state is reached (after "relaxed"), the shear value for that normal load is recorded. The normal loads are then reduced gradually prior to re-shearing. The shear values are recorded for different normal loads after they are reduced and the sample is "relaxed". This test is of value in areas of known hillside failures and for hillside stability repair.

- **SWELL/CONSOLIDATION** - A natural undisturbed, or re-molded sample is used to determine the potential for expansion or consolidation under anticipated loading conditions when the sample is subjected to increased water content. This test is run in accordance with ASTM D2435 and D4546 and performed on a single counter balance lever system type consolidometer. Samples are confined within a ring and loaded vertically with pressures similar to those anticipated under expected real life conditions.

  A seating cycle is applied to compensate for disturbances to the sample during transport. The sample is loaded to approximately one-half (1/2) over burden pressure by doubling successive loads. Each loading condition is placed for one (1) hour until approximately one-half (1/2) over burden pressure, then the sample is rebounded to start the consolidation test.

  The sample is then allowed to consolidate once again under varying load conditions, until movement is nominal at each load, and the final reading is recorded for each load. The load amount is increased until the anticipated load is reached, at which time the sample is submerged in water, and allowed to consolidate further or expand when subjected to this increased moisture until movement is once again nominal, and the final reading recorded. The sample is then subjected to additional increased loads until the data provides enough information to reasonably predict the potential for consolidation and/or swell under varying anticipated conditions.

- **HYDROMETER ANALYSIS** - The particle size distribution of the fine portion of a soil sample is determined in accordance with ASTM D1140. This test is run when the specific determination of the particle size distribution of the fine grained soils (-200) beyond standard classification (using -200 testing, in conjunction with Atterberg Limits) is required.

- **R VALUE** - This test is becoming more widely used for the design of pavement sections. Resistance ("R" Value) testing is performed by the California Materials Method No. 301 for base, sub-base, and base course. Three samples are prepared. Exudation pressures and "R" values are determined for each specimen. The graphically determined "R" value, at an exudation pressure of 300 psi, is reported.

- **SOLUBLE SULFATES** - The soluble sulfate content of representative samples is evaluated by standard geochemical techniques. California Materials Method No. 417.

- **SAND EQUIVALENT (S.E.)** - Sand Equivalent (S.E.) testing is performed in general accordance with AASHTO T176.

LABORATORY TEST RESULTS SUMMARY SHEET

SAMPLE		DD %	MC %	LL	PL	PI	EI	Classification	Misc./Comments
Loc.	Depth								
TP-1	2’	-	16.4	-	-	-	25	CL	-200 = 62
TP-2	1.5’	-	18.2	-	-	-	22	CL	-200 = 71

APPENDIX D

GRADING SPECIFICATIONS

Suggested Specifications for Placement of
Compacted Earth Fill and Backfill

TABLE OF CONTENTS

ATTACHMENTS

GRADING SPECIFICATIONS

GENERAL

A representative of the soils engineer should be on-site as the owner's representative to observe the placement of all compacted fill and backfill on the project. The soils engineer shall inspect all earth materials prior to their use, in addition to the methods of placement, and the degree of compaction obtained.

MATERIALS

Materials used for compacted fill and backfill shall be approved by the soils engineer prior to their use. Fill material, including rock, shall have a maximum dimension no greater than six inches (6"). Rock within fill should be dispersed to avoid nesting of rocks and creation of voids. In no case shall organic or other unsuitable material be used as fill or backfill material.

PREPARATION OF SUBGRADE

All topsoil, vegetation (including trees, major root systems, and brush), lumber, debris, rubbish, and other unsuitable material in areas to receive fill shall be removed to a depth satisfactory to the soils engineer and disposed of off-site. Removals shall extend a minimum of five feet (5') beyond the building footprint of all proposed structures. The surface of the area to be filled shall be scarified to a minimum depth of eight inches (8"), moistened or dried as necessary, and adequately compacted in a manner specified below. On slopes, a "keyway" must be excavated in accordance with Figure D-4 "Key and Benching Details", and approved before any fills are placed.

PLACING FILL

No fill shall be placed during weather conditions that would be adverse to the fill placement. All soil clods shall be reduced to six inches (6") or smaller size. Distribution of material in the fill shall be such as to preclude the formation of layers of material differing from the surrounding material. Each layer of fill shall be thoroughly mixed during placement to insure uniformity of material and moisture in each layer. Each layer shall have a maximum loose thickness of six to ten inches (6"-10"), and its surface shall be approximately horizontal. Each successive lift of fill placed on slopes should be benched into the slope, providing good bond between the fill and slope (see Figure D-3 "Side Hill Stability Fill Detail").

MOISTURE CONTROL

During compaction, the fill material in each layer shall be conditioned to a moisture content near or slightly above optimum, with the moisture content uniform throughout the fill. If, in the opinion of the soils engineer, the material placed as fill is too wet or dry to permit adequate compaction, it shall be removed and adequately dried or moisture conditioned prior to replacement and compaction.

COMPACTION

When an acceptable, uniform moisture content is obtained, each fill layer shall be compacted to applicable standards by a method acceptable to the soils engineer and as specified in the foregoing report. Compaction shall be performed by multiple passes with approved equipment suited to the soils being compacted. If a "sheep's foot" roller is used, it shall be provided with cleaner bars attached in a manner that will prevent the accumulation of material between the tamper feet. The tamper feet should be able to provide an increase in effective weight.

MOISTURE-DENSITY DETERMINATION

Representative samples of fill materials to be placed shall be furnished to the soils engineer by the contractor for determination of maximum density and optimum moisture content for these materials. Tests for this determination will be made using methods conforming to requirements of ASTM D698 or ASTM D1557. The results of these tests shall be the basis of control for all compaction effort.

DENSITY TESTS

The density and moisture content of each layer of compacted fill will be determined by the soils engineer in accordance with ASTM D1556 or ASTM D2922. Any material found not to comply with the minimum specified density shall be recompacted until the required density is obtained. Sufficient density tests shall be made and the results submitted to support the soils engineer's recommendations. The results of density tests will also be furnished to the owner, the project engineer, and the contractor by the soils engineer.

CUT–FILL LOT

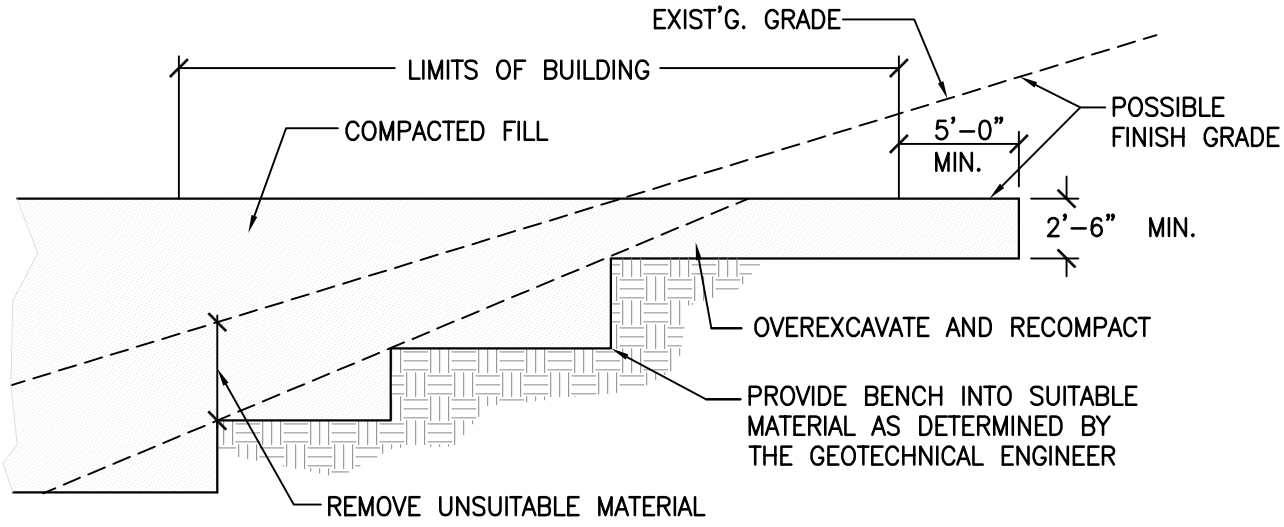

CUT LOT

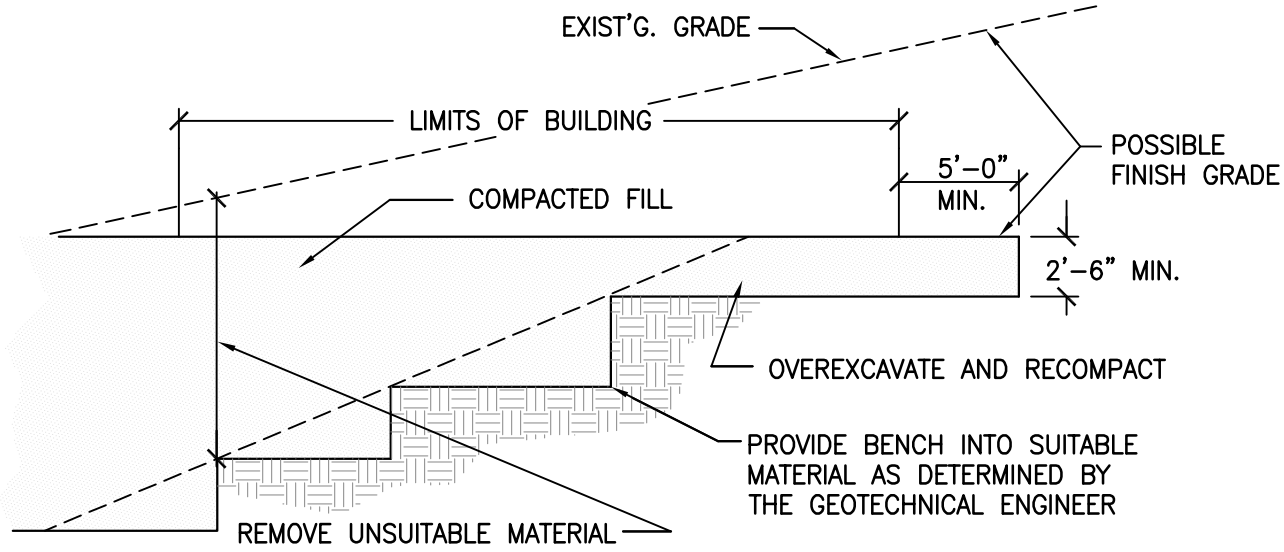

NOTE:

REMOVALS, KEYWAY DEPTH/WIDTH, AND SUBDRAIN RECOMMENDATIONS MAY BE MODIFIED BY THE GEOTECHNICAL ENGINEER BASED ON FIELD CONDITIONS.

TRANSITION LOT GRADING

ACCUTECH ENGINEERING

7342 REMLEY PLACE
LA JOLLA, CA 92037

DATE:	FIGURE NO.:	PROJECT NO.:
10/1/19	D-1	**19564-1**

F:\CURRENT\FORMS-TEMPLATES, LISTS-MISC\Pad Geo Rpt\Appendix D Grading Specs\D-1 Transitionlot.dwg, 11/22/2016 3:31:33 PM, CutanDr Writer

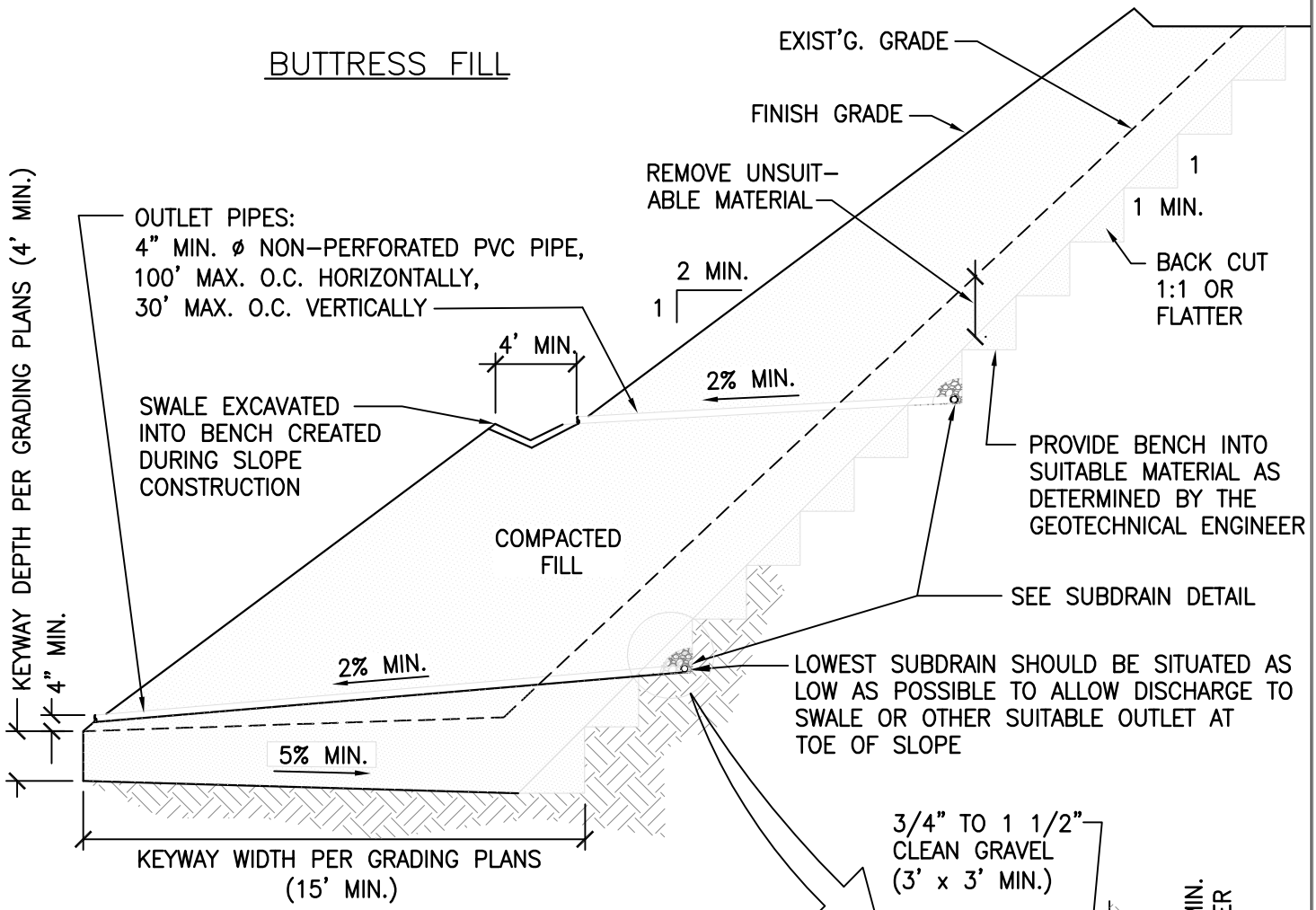

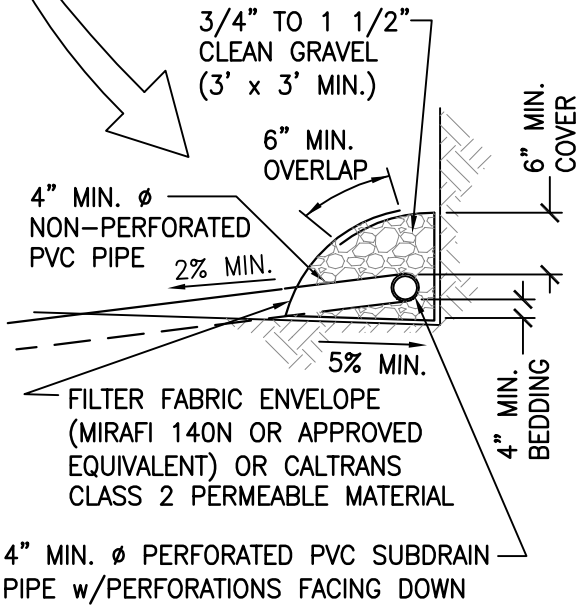

SUBDRAIN DETAIL NOT TO SCALE

NOTE:

REMOVALS, KEYWAY DEPTH/WIDTH, AND SUBDRAIN RECOMMENDATIONS MAY BE MODIFIED BY THE GEOTECHNICAL ENGINEER BASED ON FIELD CONDITIONS.

BUTTRESS FILL & SUBDRAIN TRENCH

ACCUTECH ENGINEERING

7342 REMLEY PLACE
LA JOLLA, CA 92037

DATE:	FIGURE NO.:	PROJECT NO.:
10/1/19	D-2	19564-1

F:\CURRENT\FORMS-TEMPLATES, LISTS-MISC\Final Geo Rpt\Appendix D Grading Specs\D-2 ButtressFillDwg, 11/22/2016 3:31:54 PM, CutePDF Writer

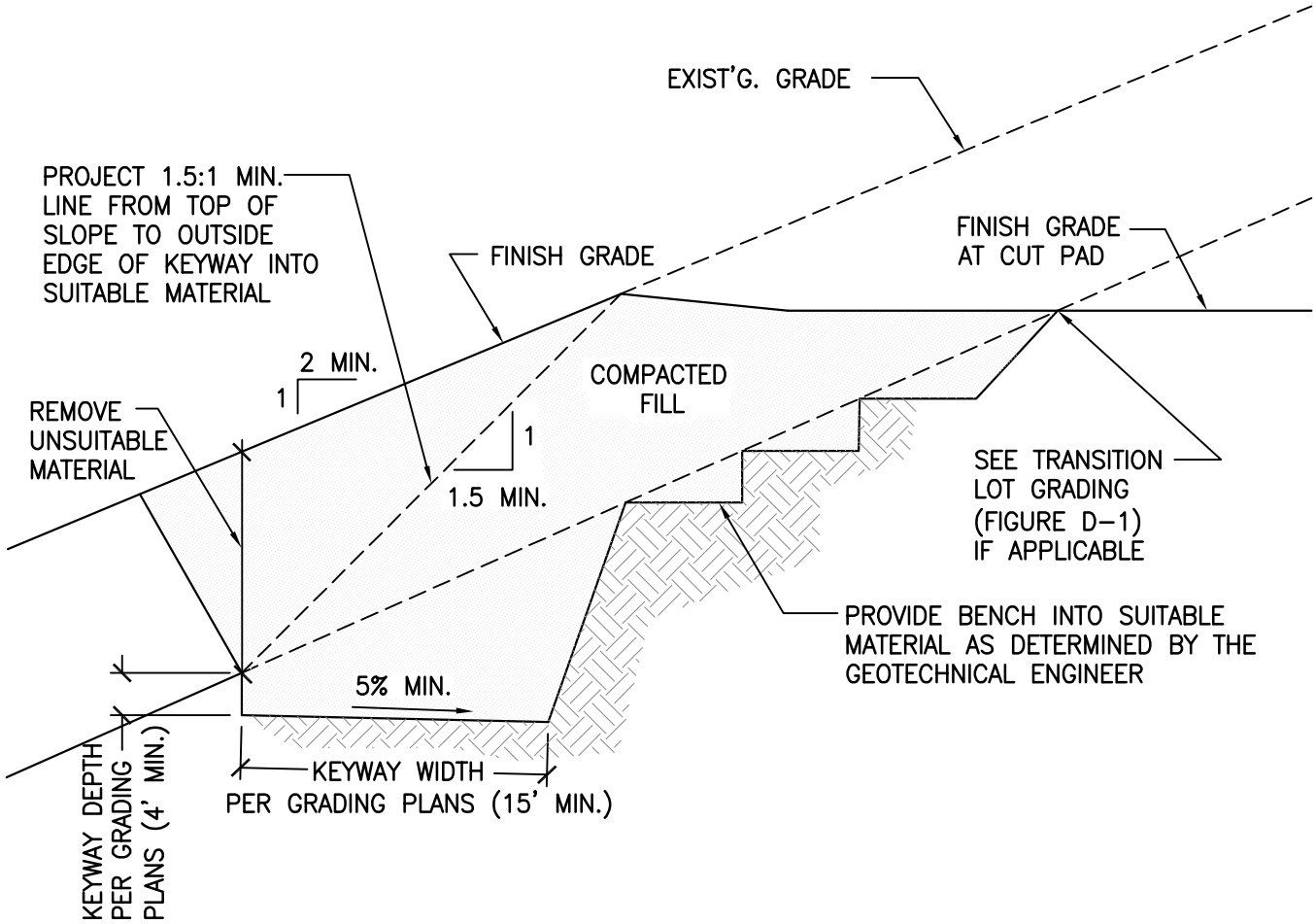

NOTE:

REMOVALS, KEYWAY DEPTH/WIDTH, AND SUBDRAIN RECOMMENDATIONS MAY BE MODIFIED BY THE GEOTECHNICAL ENGINEER BASED ON (EXPOSED) FIELD CONDITIONS.

NOT TO SCALE

STABILITY FILL

ACCUTECH ENGINEERING

7342 REMLEY PLACE
LA JOLLA, CA 92037

DATE:	FIGURE NO.:	PROJECT NO.:
10/1/19	D-3	**19564-1**

F:\CURRENT\FORMS-TEMPLATES, LISTS-MISC\Prel Geo Rpt\Appendix D Grading Specs\D-3 Stability Fill.Dwg, 11/22/2016 3:32:17 PM, CuanOr Writer

FILL SLOPE

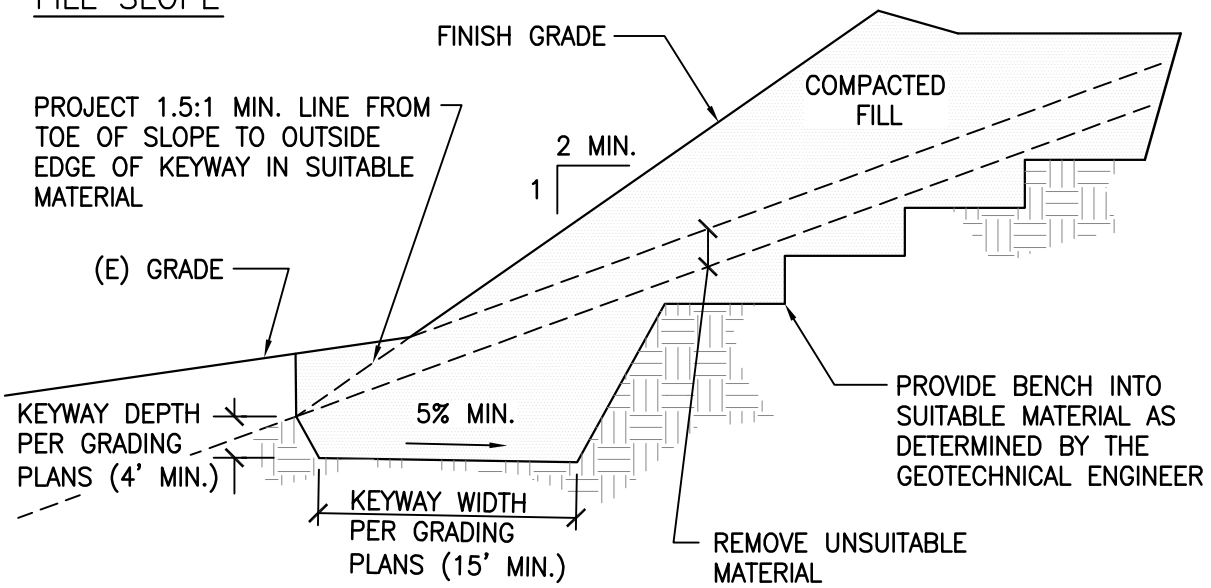

FILL-OVER-CUT SLOPE

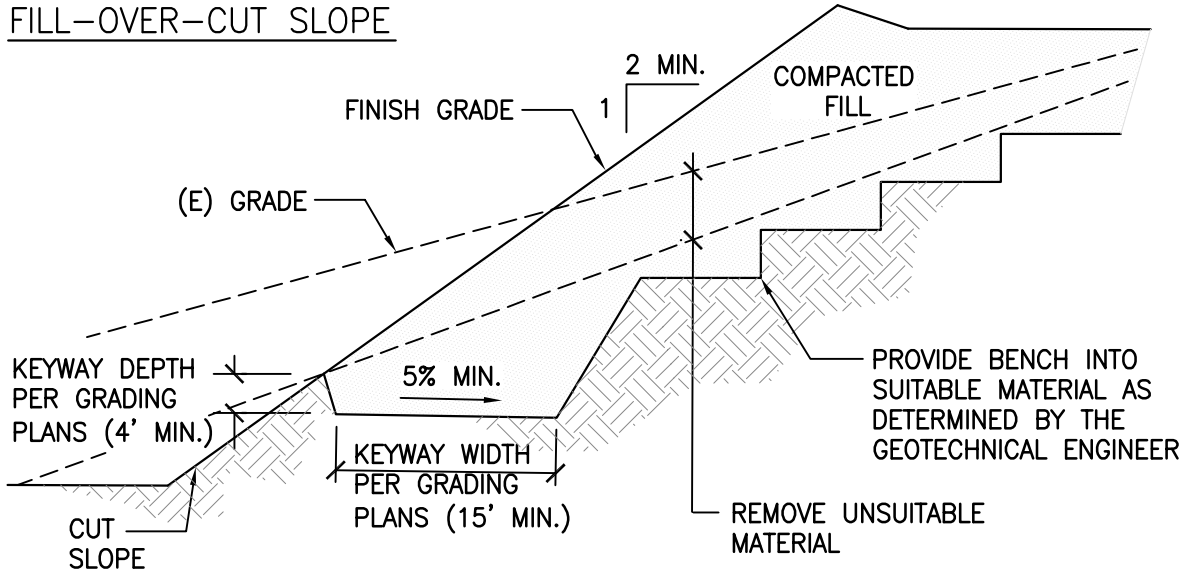

NOTE:

REMOVALS, KEYWAY DEPTH/WIDTH, AND SUBDRAIN RECOMMENDATIONS MAY BE MODIFIED BY THE GEOTECHNICAL ENGINEER BASED ON FIELD CONDITIONS.

NOT TO SCALE

FILL SLOPES

ACCUTECH ENGINEERING

7342 REMLEY PLACE
LA JOLLA, CA 92037

DATE:	FIGURE NO.:	PROJECT NO.:
10/1/19	D-4	19564-1

F:\CURRENT\CORNC-TEMPLATES, LISTS-HBC\Prel Geo Rpt\Appendix D Grading Specs\D-4 FILLSlopes.Dwg, 11/22/2016 3:33:32 PM, CutanDF.Wtbl

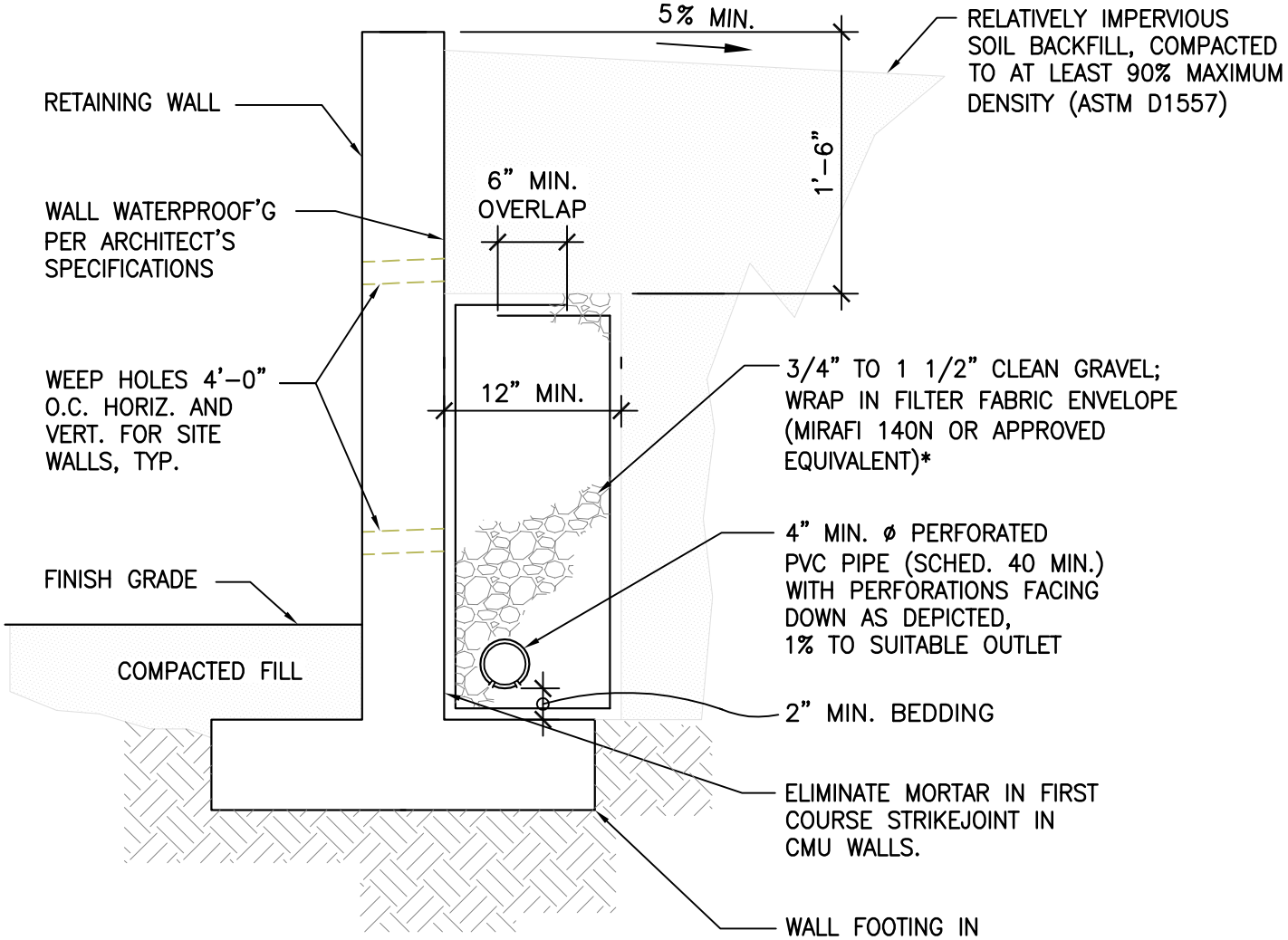

SPECIFICATIONS FOR CALTRANS CLASS 2 PERMEABLE MATERIAL

U.S. STANDARD SIEVE SIZE	% PASSING
1"	100
3/4"	90–100
3/8"	40–100
No. 4	25–40
No. 8	18–33
No. 30	5–15
No. 50	0–7
No. 200	0–3

SAND EQUIVALENT >75

NOTE:
IF CALTRANS CLASS 2 PERMEABLE MATERIAL (SEE GRADATION TO LEFT) IS USED IN PLACE OF 3/4" TO 1 1/2" GRAVEL, FILTER FABRIC IS NOT REQUIRED. CALTRANS CLASS 2 PERMEABLE MATERIAL MUST BE COMPACTED TO AT LEAST 90% MAXIMUM DENSITY (ASTM D1557)

NOT TO SCALE

SITE RETAINING WALL DRAINAGE

ACCUTECH ENGINEERING

7342 REMLEY PLACE
LA JOLLA, CA 92037

DATE:	FIGURE NO.:	PROJECT NO.:
10/1/19	D-5	19564-1

F:\CURRENT\FORMS-TEMPLATES, LISTS-HISC\Pad Geo Rpt\Appendix D Grading Specs\D-5 RetainingWallDrain.Dwg, 11/22/2016 3:33:27 PM, CuanOF Writer

CANYON SUBDRAIN SECTION

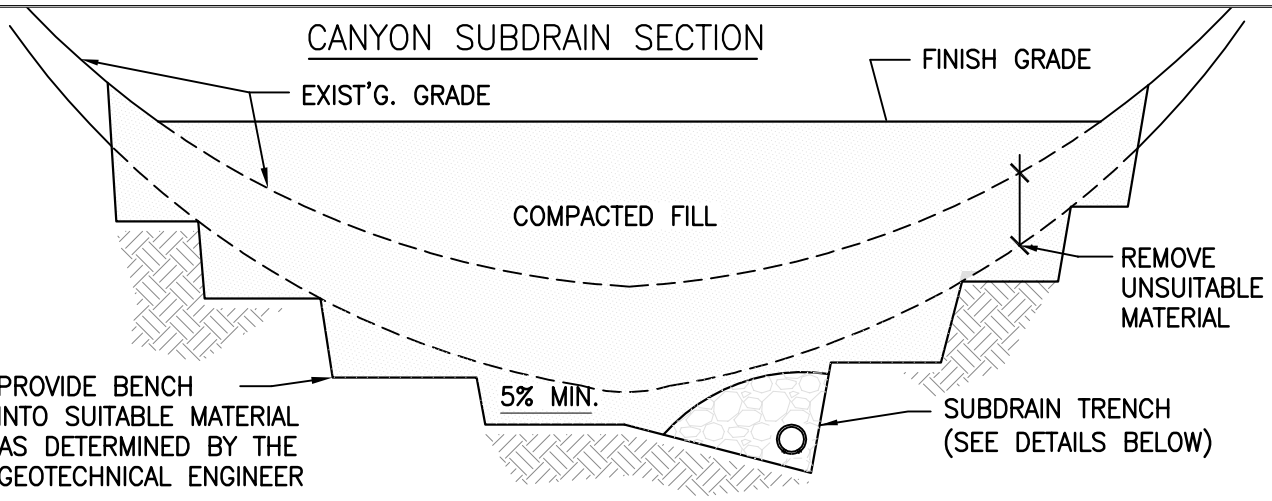

SUBDRAIN TRENCH DETAILS

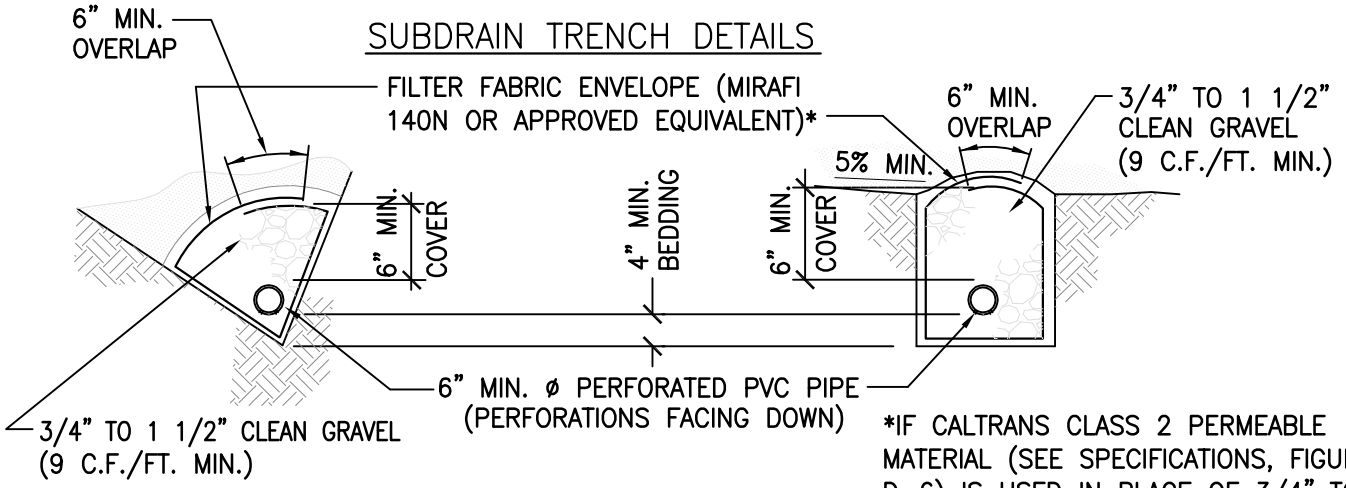

*IF CALTRANS CLASS 2 PERMEABLE MATERIAL (SEE SPECIFICATIONS, FIGURE D-6) IS USED IN PLACE OF 3/4" TO 1 1/2" GRAVEL, FILTER FABRIC IS NOT REQUIRED. CALTRANS CLASS 2 PERMEABLE MATERIAL MUST BE COMPACTED TO AT LEAST 90% MAX. DENSITY (ASTM D1557).

CANYON SUBDRAIN ELEVATION

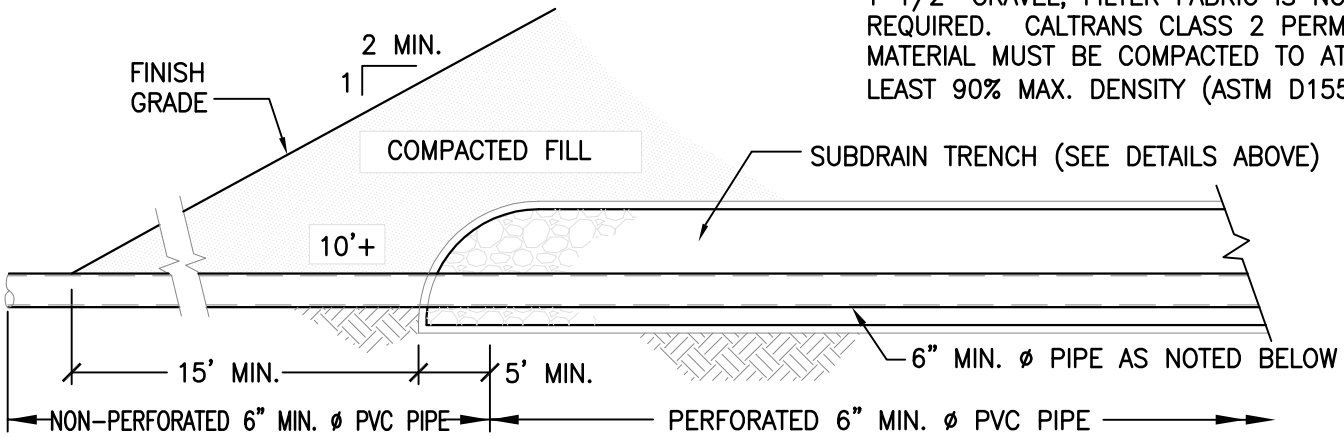

NOTE:

REMOVALS, KEYWAY DEPTH/WIDTH, & SUBDRAIN RECOMMENDATIONS MAY BE MODIFIED BY THE GEOTECHNICAL ENGINEER BASED ON FIELD CONDITIONS.

NOT TO SCALE

CANYON SUBDRAIN

ACCUTECH ENGINEERING

7342 REMLEY PLACE
LA JOLLA, CA 92037

DATE:	FIGURE NO.:	PROJECT NO.:
10/1/19	D-6	19564-1

F:\CURRENT\CORNCT-EMPLATES, LISTS-HISC\Pnd Geo Rpt\Appendix D Grading Specs\D-6 CanyonSubdrain.Dwg, 11/22/2016 3:30:09 PM, CutanDF Writer

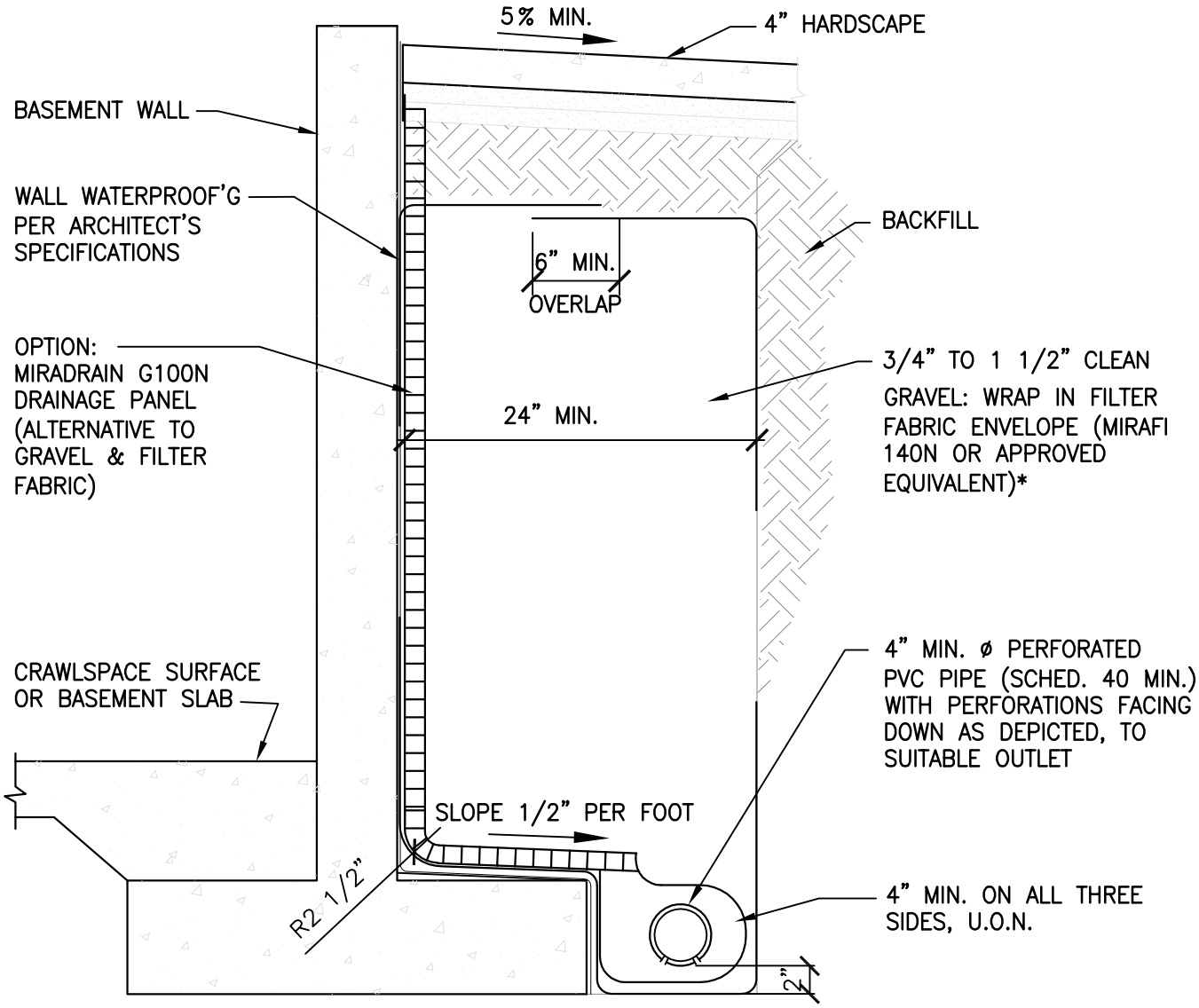

SPECIFICATIONS FOR CALTRANS CLASS 2 PERMEABLE MATERIAL

U.S. STD. SIEVE SIZE	% PASSING
1"	100
3/4"	90–100
3/8"	40–100
No. 4	25–40
No. 8	18–33
No. 30	5–15
No. 50	0–7
No. 200	0–3

SAND EQUIVALENT >75

* IF CALTRANS CLASS 2 PERMEABLE MATERIAL (SEE GRADATION TO LEFT) IS USED IN PLACE OF 3/4" TO 1 1/2" GRAVEL, FILTER FABRIC IS NOT REQUIRED. CALTRANS CLASS 2 PERMEABLE MATERIAL MUST BE COMPACTED TO AT LEAST 90% MAXIMUM DENSITY (ASTM D1557)

NOT TO SCALE

STEMWALL SUBDRAIN/BASEMENT WALL DRAINAGE

ACCUTECH ENGINEERING

7342 REMLEY PLACE
LA JOLLA, CA 92037

DATE:	FIGURE NO.:	PROJECT NO.:
10/1/19	D-7	19564-1

F:\CURRENT\FORMS-TEMPLATES, LISTS-HISC\Std Geo Rpt\Appendix D Grading Specs\D-7 StemwallSubdrain_BasementWallDwg, 11/22/2016 3:30:35 PM, CuanOF Writer

APPENDIX E

GEOLOGIC RECONNAISSANCE

Prepared by Michael W. Hart
Certified Engineering Geologist
CEG #706

MICHAEL W. HART
ENGINEERING GEOLOGIST
P.O. BOX 261227 • SAN DIEGO • CALIFORNIA • 92196 • 858 578-4672

File No. 10987-2019
April 15, 2019

Ted Pintar
6981 Paseo Laredo
La Jolla, California
92037

Subject: 7342 Remley Place
La Jolla, California
GEOLOGIC INVESTIGATION

Dear Mr. Pintar:
In accordance with your authorization I have completed a geologic investigation of the subject residential property for the primary purpose of determining if the site is traversed by an active or potentially active fault. The results of this study indicate the site is underlain by the Ardath Shale that consists of thinly bedded, light brown to grey clay shale and sandstone that is unbroken by faulting. Therefore, it is concluded that the site is not located on an active or potentially active fault. In addition, it is concluded that there is no evidence that the property is situated on or adjacent to an ancient landslide. It was determined that bedding in the Ardath Shale dips in an out-of-slope direction in the road cut along the south property line. This condition will require that foundations near the top of slope be extended below the lowest "daylited" bedding plane as shown on Figure 5 of this report.

If you have any questions after reviewing the report, please contact me at your convenience.

Very truly yours,

Michael W. Hart, Certified Engineering Geologist
CEG 706

1cc addressee
1cc Greg Noonan, Greg Noonan & Associates
1cc Patrick Ahern, Berkshire Hathaway

GEOLOGIC INVESTIGATION
7342 REMLEY PLACE
La Jolla, California

INTRODUCTION

This report presents the results of a geologic investigation for a proposed new residence to be located at 7342 Remley Place in La Jolla, California (Figure 1). The northwest trending Country Club fault is shown on the City of San Diego Geologic Hazard Maps as crossing Remley Place near the northeast corner of the property. Accordingly, the primary purpose of this report is to determine if this fault is present on-site and if so to provide appropriate recommendations for development. In addition, this report addresses other potential geologic hazards such as landsliding and seismicity. The scope of work included geologic mapping, a review of published geologic literature, interpretation of aerial photographs, and geologic logging of two exploratory trenches.

FIELD WORK

Fieldwork performed for this study consisted of geologic mapping including observation of natural and man-made geologic outcrops utilizing a preliminary site plan prepared by the project architect. An exploratory fault trench varying in depth from five to seven feet was excavated in a north-south direction near the east property line with a tracked backhoe equipped with a 24" wide bucket. The trench walls were carefully logged at a scale of 1" = 5'. The trench log is included as Figure 3. An additional observation trench (Trench 2) was excavated near the top of the cut slope near the southern property line to confirm bedding attitudes in an area that may receive a swimming pool and retaining wall during future development.

SITE DESCRIPTION AND PROPOSED PROJECT

The property is currently occupied by a single family residence that will be demolished and replaced with a similar single-family residence. The proposed improvements will include a swimming pool in the rear yard along with retaining walls. The existing residence was constructed at or near natural grade and accordingly, no significant grading was performed during the original development of the property. The property is currently landscaped with a few

shrubs and fruit trees. Topographically, the property is situated on a gentle south-facing slope that drains toward Romero Drive (Figure 2).

The highest elevation on the property, approximately 508 feet, occurs near the northeast property corner from which point the lot slopes gently southward to the top of an approximately 12 feet high road cut along Romero Drive. The current plans indicate no significant unsupported cut slopes will be made and that fills will likely be less than 10 feet thick.

GENERAL GEOLOGY AND GEOLOGIC SETTING

The project is situated on the southwest slopes of Mount Soledad, an asymmetrical anticline created by compressional stresses related to movement along the Rose Canyon fault zone located one-half mile to the north. The site lies in the coastal section of the Peninsular Ranges Geomorphic Province and is underlain by a thick sequence of primarily marine clastic sediments eroded from the Peninsular Ranges as a result of tectonic uplift beginning in the Cretaceous Period approximately 60 million years ago. That portion of the coastal province in which the site is located is underlain by Tertiary-aged marine sediments consisting in this area primarily of moderately south-dipping siltstone, fine sandstone, and massive to thinly bedded claystone of the Eocene Ardath Shale.

STRATIGRAPHY

Mapping by Kennedy (1975) indicates the site is underlain by a single geologic formation correlated with the Ardath Shale that is
overlain by relatively thick clayey topsoils.

Ardath Shale

The Ardath Shale is an Eocene-aged sedimentary unit that is composed of light grey, to brown, thinly bedded claystone, siltstone, and light yellow-brown, very fine sandstone. Mapping by Kennedy (1975) indicates that this unit lies in fault contact with the Cabrillo and Mount Soledad Formations north and west of the site.

GEOLOGIC STRUCTURE

Bedrock in this area of La Jolla dips to the southwest and southeast at inclinations varying from 15 to 30 degrees (see Trench logs and Geologic Section, Figures 3 through 5). Observations of

exposures of the Ardath Shale in the exploratory trench indicate that significant fracturing is not present.

GEOLOGIC HAZARDS

Potential geologic hazards considered in this report include the potential for surface faulting, liquefaction, seismically induced settlement, landsliding, and seismic shaking. Each is discussed in detail below.

Local Faulting

According to mapping by Kennedy (1975, 1977) and the Seismic Hazard Maps of the City of San Diego, the site is not located on an active fault. The closest known active fault is the Mt. Soledad Strand of the Rose Canyon fault located approximately one-half mile to the northeast.

The City of San Diego Seismic Hazard Category map no. 29 indicates that the property lies within Geologic Hazard Category 12 (Figures 1 & 2). Category 12 consists of approximately 200 feet wide zones placed around Potentially Active faults such as the Country Club fault. The geologic map of the La Jolla Quadrangle by Kennedy (1975) depicts this fault as crossing Remley Place near the northeast corner of the property. Potentially active faults as defined by the City of San Diego are faults that are either inactive, presumed inactive, or whose degree of activity is unknown. Since the site is located within Geologic Hazard Category 12 wherein the Country Club Fault may be present, a single exploratory fault trench was excavated near the eastern property line in a direction that is nearly perpendicular to the expected trace of the fault. Inspection and careful logging of the trench revealed that the Ardath Shale has an average dip to the south of 20 degrees throughout the length of the 87 feet long trench and was unbroken by faulting. It is concluded, therefore, that the Country Club fault is not present on site.

Seismicity

The site will be affected by seismic shaking as a result of earthquakes on major active faults located throughout the southern California area. The nearest active fault system, the Rose Canyon fault, is the most significant fault to the site with respect to the potential for seismic activity. Lindvall and Rockwell (1995) have described the Rose Canyon fault system in terms of

several segments that have distinctive earthquake potential. The closest segment is the Mission Bay segment that extends from San Diego Bay on the south to La Jolla on the north. The Del Mar segment extends offshore from La Jolla to Oceanside.

According to Lindvall and Rockwell (1995), the Mission Bay and Del Mar fault segments are capable of generating M_w6.4 to M_w6.6 earthquakes, respectively, with an estimated recurrence time of approximately 720 years for these events and 1800 years for an earthquake event of M_w6.9 that would result from rupture of both segments concurrently. A M_w6.9 event could produce peak ground accelerations at the site of approximately 0.6 to 0.7g (Joyner and Boore, 1982). Other active faults, the Elsinore, San Jacinto, and San Andreas faults lie approximately 47, 70, and 97 miles, respectively, to the east with corresponding estimated peak ground accelerations for Maximum Probable Earthquake events of approximately 0.08g, 0.03g, and 0.02g (Joyner and Boore, 1982).

Liquefaction and Seismically Induced Settlement

The bedrock soils underlying the site consist of dense siltstone and claystone comprising the Ardath Shale. Properly compacted fills soils as well as the underlying bedrock are not considered susceptible to seismically induced liquefaction or settlement.

Landsliding and Slope Stability

It is concluded from inspection and logging of the exploratory trenches that the Ardath Shale extends across the length of the site unbroken by the effects of both faulting and landsliding and therefore it is concluded that the site is not located on an ancient landslide. City of San Diego Geologic Hazard map 29 indicates that the head of a suspected landslide (Geologic Hazard Category 22) lies just offsite near the southern property line (Figure 1). A suspected Landslide, as the term, implies, is a landform that has certain features resembling or suggestive of a landslide but has not been confirmed by geotechnical studies. Review of historic stereo-pairs of aerial photographs (U.S.D.A., 1953) as well as City of San Diego topographic maps (scale: 1” = 200’) indicates no geomorphic evidence to support the presence of the suspected landslide.

Bedding attitudes measured in the exploratory fault trench (Trench 1) as well as in Trench 2 located near the top of the road cut along Romero drive indicate that bedding in the Ardath Shale dips to the south at inclinations of 20 to 22 degrees. The Romero Drive road cut has an

inclination of approximately 35 degrees (1.5 hor. to 1.0 vertical). This means that the moderately dipping bedding is unsupported in the face of the slope. Although this condition has so far not resulted in slope instability, increased structural loading near the top of slope such as by the addition of fill or foundation loads, or an increase in groundwater could lead to sloughing along bedding planes.

Preliminary plans indicate that the rear lot grade may be lowered in some areas while in other locations, such as the eastern portion of the backyard, the grade may be raised by construction of a retaining wall. A swimming pool is currently proposed near the top of slope at approximately existing grade in the western portion of the rear yard. The cross section shown on Figure 5 depicts an area in the central part of the property where the grade is proposed to be lowered by several feet. It is recommended, therefore, that foundations for any structures located near the top of slope be placed below the level of the lowest daylited bedding plane (see Figure 5). The depth of the foundations will depend on the location of the structures as well as final lot grades. The final foundation design should be determined by the project geotechnical engineer.

GROUNDWATER:

No seepage or other evidence of groundwater was observed during field work for this geologic investigation. The depth to the regional groundwater surface is unknown, however, the currently proposed building pad will not be excavated to a depth where it could be reasonably anticipated that the regional groundwater level would be intercepted. It is possible that perched groundwater could occur on cut slopes after or during heavy rains or from seepage from uphill properties. The recommendations of the geotechnical report and project civil engineer regarding site drainage should be implemented in the design of the project.

CONCLUSIONS AND RECOMMENDATIONS

1. The Country Club fault is shown on published geologic maps as crossing Remley Place near the northern property line. The results of this geologic investigation that included detailed logging of an exploratory fault trench indicate that the site is underlain by moderately south- dipping Ardath Shale that is unbroken by faulting. It is, therefore, concluded that the site is not traversed by active or potentially active faults. The closest active fault to the property is the Mount Soledad strand of the Rose Canyon fault that lies approximately ½ mile to the northeast.

2. Development plans are not complete, however, preliminary drawings call for a swimming pool near the top of slope at approximately existing grade as well as a retaining wall to support a split level rear yard. It is recommended, therefore, that foundations for any structures located near the top of slope be extended below the level of the lowest daylited bedding plane in the cut slope (see Figure 5). The depth of the foundations will depend on the location of the structures and the final lot grades. The final foundation design should be determined by the project geotechnical engineer.

3. It is recommended that the project geotechnical engineer as well as the engineering geologist review final foundation plans and grading plans for conformance with the recommendations of this report.

Limitations

This report has been prepared exclusively for the use of the Client, and is not intended to be relied upon by any other entities or persons. The purpose and intent of this report is to address geologic conditions and the potential for the site to be impacted by geologic hazards. *Details regarding foundation design, reinforcement, and grading recommendations are beyond the scope of a geologic investigation. Such recommendations may only be made by the project structural and geotechnical engineer.* The findings of this report are valid as of the present date. However, changes in the conditions of a property can occur with the passage of time, whether they be due to natural processes or the works of man on this or adjacent properties. In addition, changes in applicable or appropriate standards may occur, whether they result from legislation or the broadening of knowledge. Accordingly, the findings of this report may be invalidated wholly or partially by changes outside the control of this consultant. Therefore, this report is subject to review and should not be relied upon after a period of three years.

REFERENCES

Anderson, J. G., Rockwell, T., and Agnew, D.C., 1989, A study of the seismic hazard in San Diego, Earthquake Spectra, vol. 5(2), pp 229-333.

Joyner, W.B. and Boore, D.M. 1982, Prediction of earthquake response spectra, U.S. Geological Survey Open File Report 82-977, 16pp.

Kennedy, M.P., 1975, Geology of the San Diego Metropolitan area, California, California, Calif. Div. Mines and Geology, Bull. 200.

Kennedy, M.P. and Tan, S.S., 1975, Character and recency of faulting, San Diego metropolitan area, California, California Div. Mines and Geol. Special Rept. 123, pp. 33.

Lindvall, S.C., Rockwell, T.K., and Lindvall, C.E., 1990, The seismic hazard of San Diego revised: New evidence of Magnitude 6+ Holocene earthquakes on the Rose Canyon Fault Zone, in Proceedings of U.S. National Conference on Earthquake Engineering, Palm Springs, California, vol 1: Earthquake Engineering Research Inst., p. 679-688.

Lindvall, S.C., and Rockwell, T.K., 1995, Holocene activity of the Rose Canyon fault zone in San Diego, California, Jour. Geophysical Research, vol. 100, no. B12, Pages 24,121-24-132.

Tan, S.S., 1995, Landslide Hazards in the southern part of the San Diego metropolitan area, San Diego County, California: Landslide Hazard Identification Map No. 33.

Aerial Photographs, U.S.D.A., 1953, AXN 8M, 1 and 2.

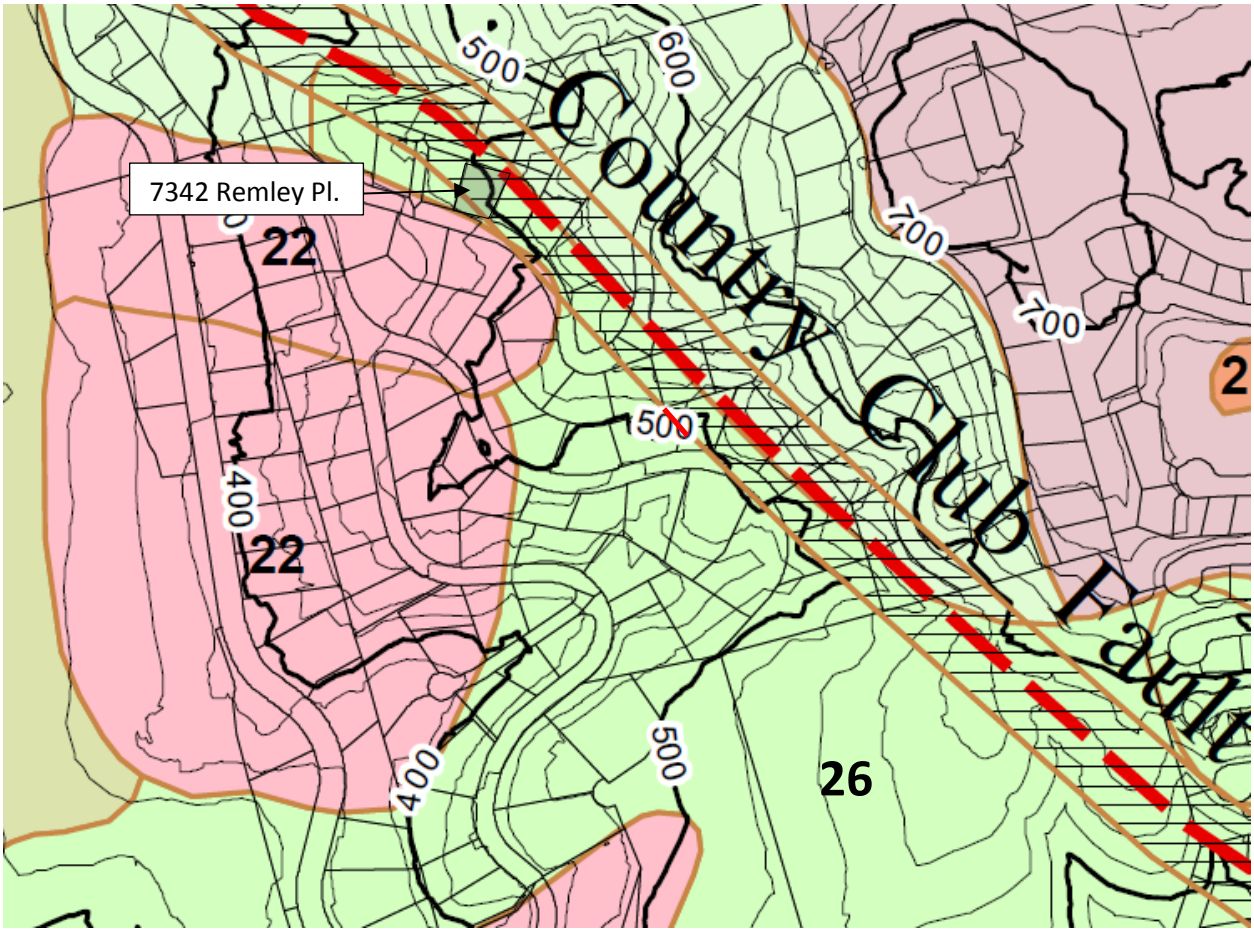

SEISMIC SAFETY STUDY MAP SHOWING GEOLOGIC HAZARDS AND FAULTS FOR THE COUNTRY CLUB AREA OF LA JOLLA, CALIFORNIA

(refrence: City of San Diego Seismic Safety Study Map 29)

LEGEND
22: Possible or conjectured landslide
26: Ardath Shale, unfavorable geologic structure

N

MICHAEL W. HART, ENGINEERING GEOLOGIST
P.O. BOX 261227 • SAN DIEGO • CALIFORNIA • 92196 • (858)-

Figure 1

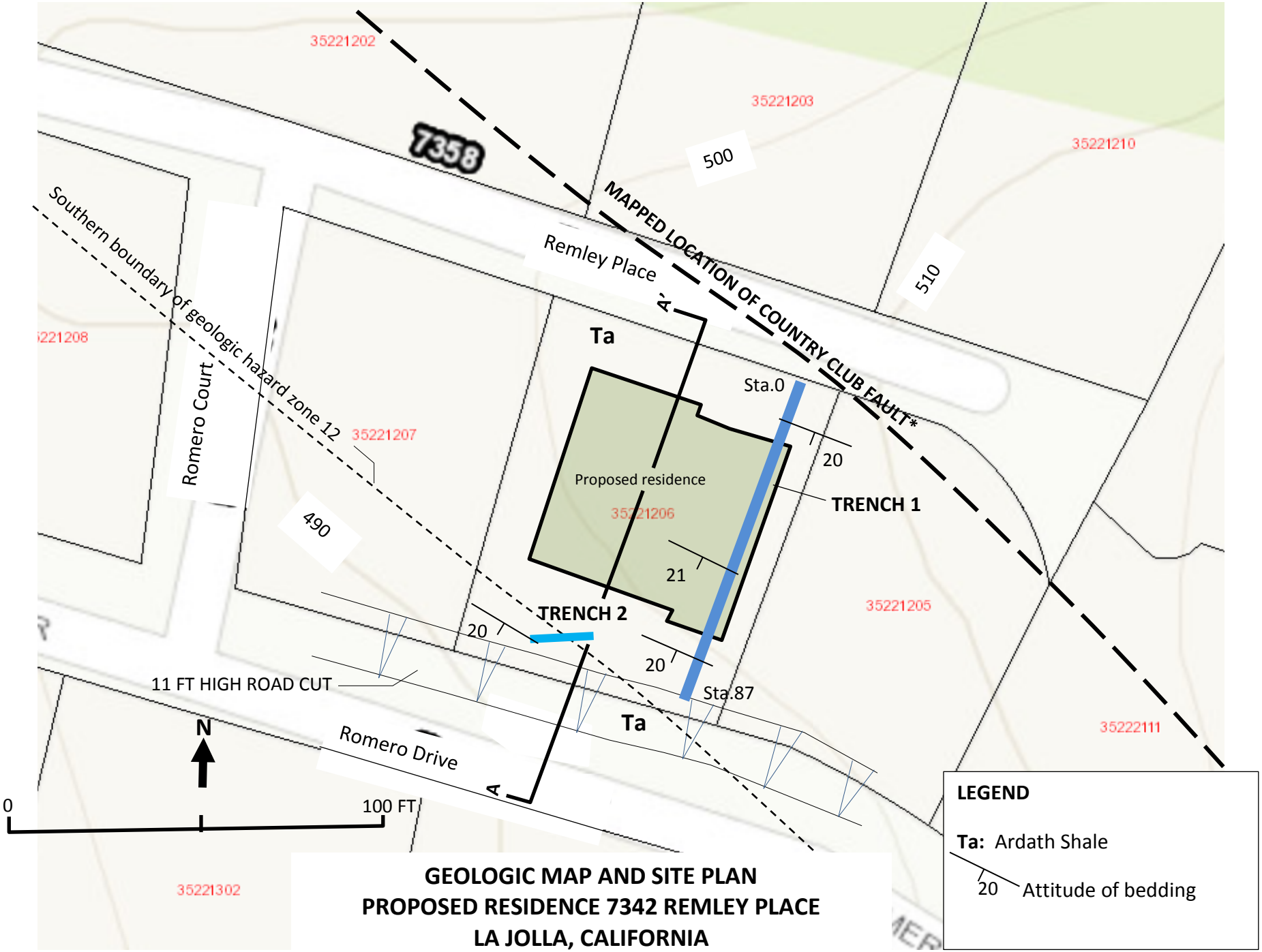

GEOLOGIC MAP AND SITE PLAN
PROPOSED RESIDENCE 7342 REMLEY PLACE
LA JOLLA, CALIFORNIA

*fault location after Kennedy (1975) and City of San Diego Geo. Haz. Map 29

Figure 2

TRENCH 1

7342 REMLEY PLACE, LA JOLLA, CALIFORNIA

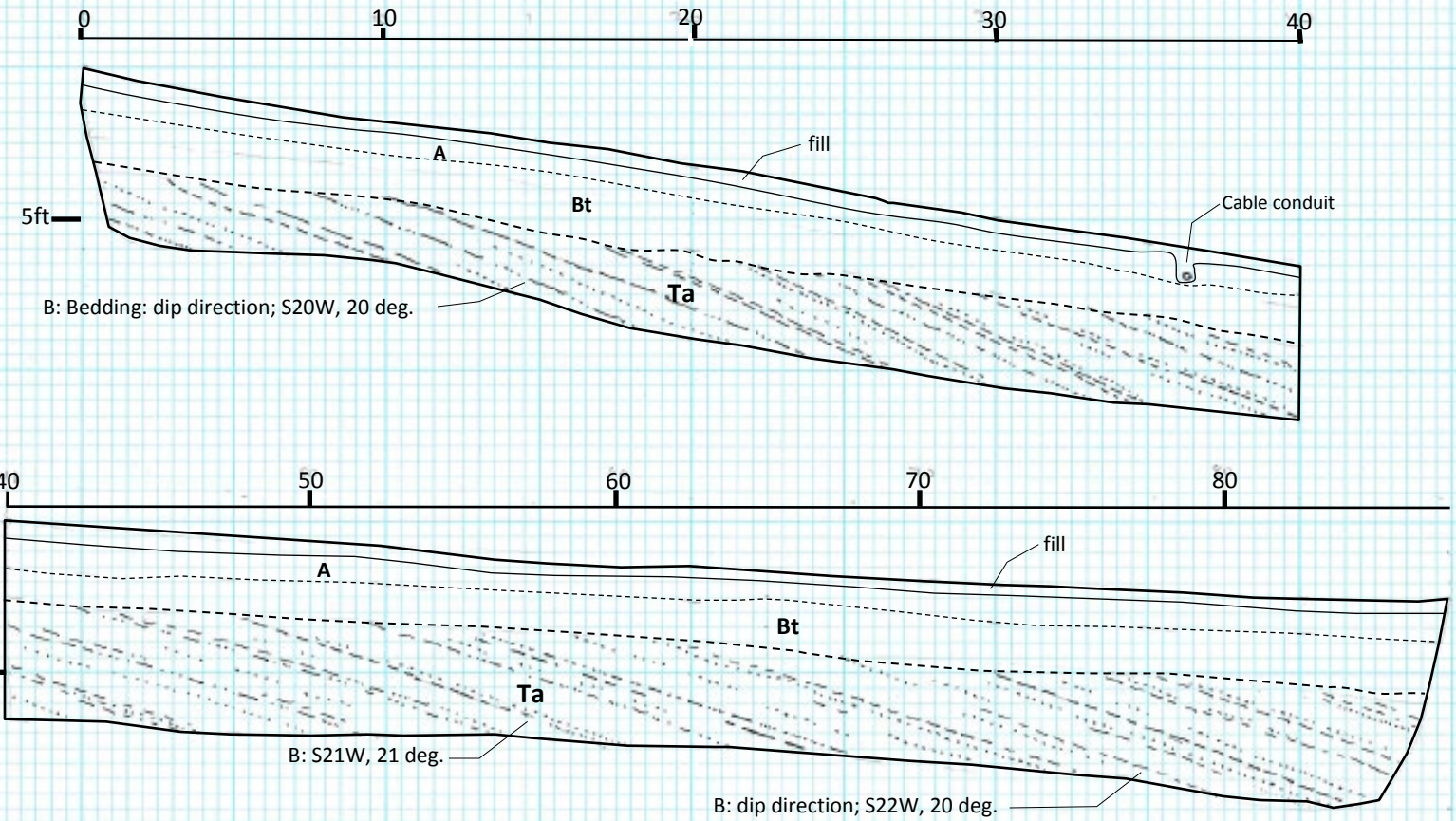

LEGEND

Soil Horizons

A: Loose, wet, dark brown, silty sand

Bt: Argillic horizon, stiff, moist, dark brown clay
Very well developed, uniform with rare carbon flecks.

Ardath Shale: Very hard, moist, lt. brown to grey clay shale and fine brown to yellow brn. silty sandstone, thinly bedded.

Michael W. Hart, Engineering Geologist
P.O. Box 261227 • San Diego • California • 92196 • (858)-578-4672

Figure 3

TRENCH 2

7342 REMLEY PLACE, LA JOLLA, CALIFORNIA

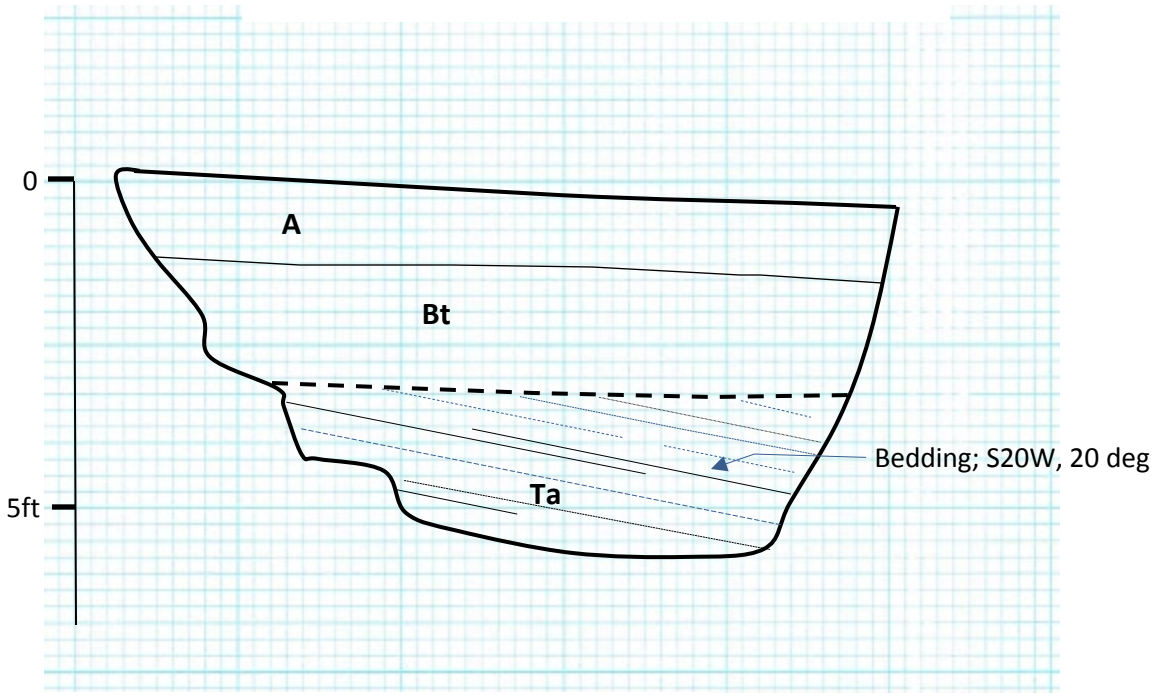

LEGEND

Soil Horizons

A: Loose, wet, dark brown, silty sand

Bt: Argillic horizon, stiff, moist, dark brown clay
Very well developed, uniform with rare carbon flecks.

Ardath Shale: Very hard, moist, lt. brown to grey clay shale and fine brown to yellow brn. silty sandstone, thinly bedded.

MICHAEL W. HART, ENGINEERING GEOLOGIST
P.O. BOX 261227 • SAN DIEGO • CALIFORNIA • 92196 • (858)-578-4672

Figure 4

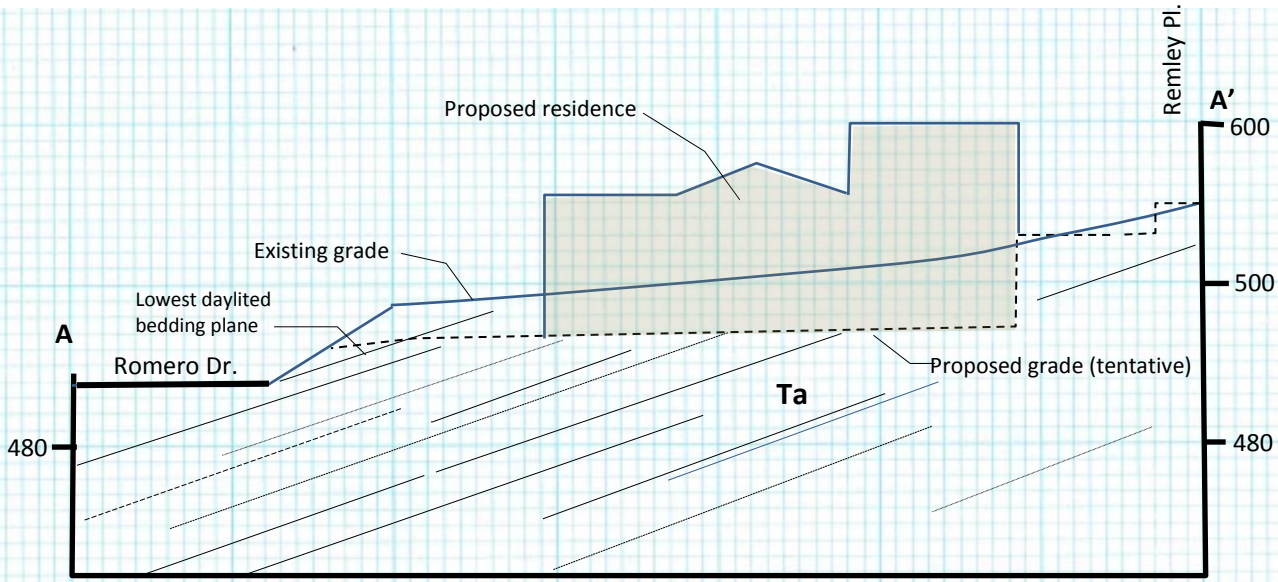

GEOLOGIC SECTION A – A'
7342 REMLEY PLACE, LA JOLLA, CALIFORNIA

Ta: Ardath Shale, hard, thinly bedded clay shale and interbeds of very fine sandstone

Note: finish grades and bldg. location are tentative and subject to revision.

0 40ft.

Michael W. Hart, Engineering Geologist
P.O. Box 261227 • San Diego • California • 92196 • (858)-578-4672

Figure 5